# TECHNICAL MANUAL


# DAT 400 Weight Indicator/transmitter with serial output and PROFIBUS or DEVICENET or CANOPEN

Software version PW13012

PAVONESYSTEMS

# TABLE OF CONTENTS



Rel ID 19360103 sw 1.7

# PRECAUTIONS

READ this manual BEFORE operating or servicing the instrument.

FOLLOW these instructions carefully.

SAVE this manual for future use.

CAUTION

The installation and maintenance of this instrument must be allowed to qualified personnel only.

Be careful when you perform inspections, testing and adjustment with the instrument on.

Perform the electrical connections in the absence of the power supply

Failure to observe these precautions may be dangerous.

DO NOT allow untrained personnel to work, clean, inspect, repair or tamper with this instrument.

# INTRODUCTION

The DAT 400 is a transmitter of weight to be combined with the load cells to detect the weight in every situation.

The module is easy to install and can be mounted on 35 mm DIN rail.

The display allows easy reading of the weight, the status of the instrument, the setting parameters and errors.

The 4 keys located below the display allow the operator to perform the functions of ZERO, TARE, GROSS/NET switching, setting of the setpoints weight, setting and tare both theoretical than real.

The DAT 400 uses the serial port RS232 with ASCII and Modbus RTU protocols for connecting to a PC, PLC and remote units. In parallel with the RS232, a USB port available.

They are always available 2 programmable weight setpoints and the control of the maximum weight value reached (peak).

The RS422/RS485 serial output allows you to connect up to 32 addressable devices.

The availability of the most common fieldbuses, as an alternative to the RS422/RS485 port, also allows the transmitter to interface with any supervision device currently offered by the market.

Available versions:

DAT 400: weight transmitter with serial output RS232 (USB), RS485 and Peak function. Supported protocols are Modbus RTU, continuous, slave and the ones upon request. Two programmable setpoints, 2 inputs and Peak function.

- **DAT 400/A:** version with the analog output.
- **DAT 400/PROFIBUS:** weight transmitter with serial output RS232 and PROFIBUS DP.
- **DAT 400/DEVICENET:** weight transmitter with serial output RS232 and DEVICENET.
- **DAT 400/CANOPEN:** weight transmitter with serial output RS232 and CANOPEN.

### IDENTIFICATION PLATE OF THE INSTRUMENT

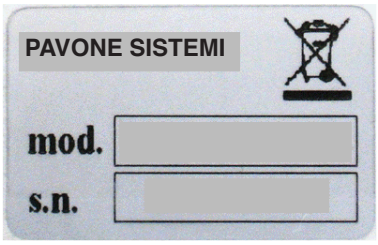


It's important to communicate this data in the event of a request for information or information concerning the instrument together with the program number and version that are shown on the cover of the manual and are displayed when the instrument is switched on.

### WARNINGS

The following procedures must be performed by qualified personnel.

All connections must be performed when the instrument is turned off.

# TECHNICAL FEATURES

| | |
|---|---|
| Power supply | 24 Vdc ± 15 % |
| Max. absorption | 5W |
| Insulation | Class II |
| Installation category | Cat. II |
| Operating temperature | -10°C ÷ +50°C (max. humidity 85% non-condensing) |
| Storage temperature | -20°C ÷ +70°C |
| Weight display | Numerical with 6 red led digits and 7 segments (h 14 mm) |
| Led | 4 LEDs of 3 mm |
| Keyboard | 4 mechanical keys |
| Overall dimensions | 106 mm x 58 mm x 90 mm (l x h x w) |
| Installation | Brackets for DIN profile section or OMEGA bar |
| Case material | self-extinguishing Noryl (UL 94 V1) |
| Connections | Screw terminal boards, pitch 5.08 mm |
| Load cells power supply | 5 Vdc/120mA (max 8 cells of 350Ω in parallel), short-circuit protected |
| Input sensitivity | 0.02 mV min. |
| Linearity | 0.01% of the full scale |
| Temperature drift | 0.001% of the full scale / °C |
| Internal resolution | 24 bits |
| Resolution of the weight displayed | Up to 60,000 divisions on the net capacity |
| Measurement range | –0.5 mV/V to +3.5 mV/V |
| Frequency of weight capture | 5 Hz - 50 Hz |
| Digital filter | To be selected from 0.2 Hz to 25 Hz |
| Number of weight decimals | 0 ÷ 3 decimal places |
| Zero calibration and full scale | Automatic (theoretical) or executable from the keyboard. |
| Logic outputs | 2 opto-isolated (dry contact), max 24Vdc / 60 mA each |
| Logic inputs | 2 opto-isolated at 24 Vdc PNP (external power supply) |
| Serial port (# 2) | RS232C and USB (in parallel) |
| Maximum cable length | 15m (RS232) and 1000m (RS422 and RS485) |
| Serial protocols | ASCII, Modbus RTU |
| Baud rate | 2400, 9600, 19200, 38400, 115200 to be selected |
| Program code memory | 64 Kbytes FLASH on-board reprogrammable from RS232 |
| Data memory | 2 Kbytes |
| OPTIONAL FIELDBUS | PROFIBUS DP V1, DEVICENET, CANOPEN |
| Connection | D-Sub 9 poles male connector<br>Removable terminal boards with screws, pitch 5.08<br>D-Sub- 9 poles female connector |
| Baud rate | 9.6 kbaud÷12 Mbaud selectable<br>125÷500 Kbaud selectable<br>50 kbaud÷1 Mbaud selectable |
| Address | 1÷125<br>1÷64 |
| Compliance with the standards | EN61000-6-2, EN61000-6-3 for EMC<br>EN61010-1 for Electrical Safety<br>UL: FILE NO E474362 |

# INSTALLATION

## GENERAL DATA

The DAT 400 is composed of a motherboard, on which you can add the options available; the motherboard is housed in a plastic enclosure by a 35mm DIN rail.

The DAT 400 should not be immersed in water, subjected to jets of water and cleaned or washed with solvents.

Do not expose to heat or direct sunlight.

## OVERALL DIMENSIONS

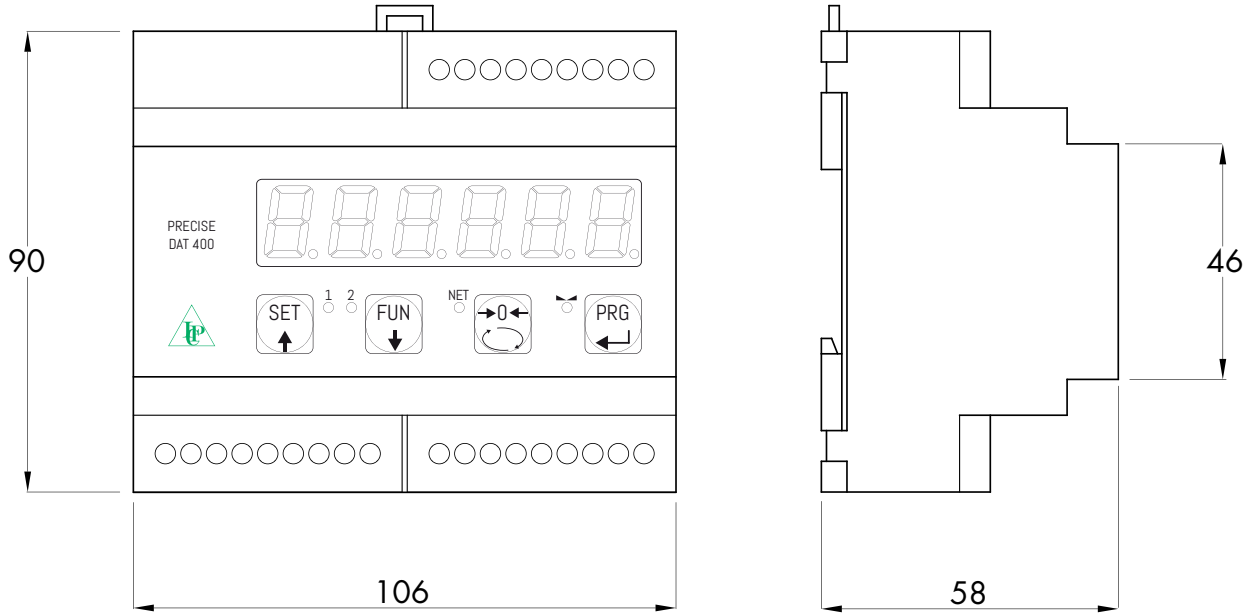


## ELECTRIC INSTALLATION

The transmitter DAT 400 uses screw terminal boards, pitch 5.08 mm, for the electrical connection. The load cell cable must be shielded and channeled away from tension cables to prevent electromagnetic interference.

## INSTRUMENT POWER SUPPLY

The instrument is powered through the terminals 8 and 9. The power cord must be channeled separately from other cables.

The supply voltage is electrically isolated.

Power supply voltage: 24 Vdc/ ± 15% max. 5W

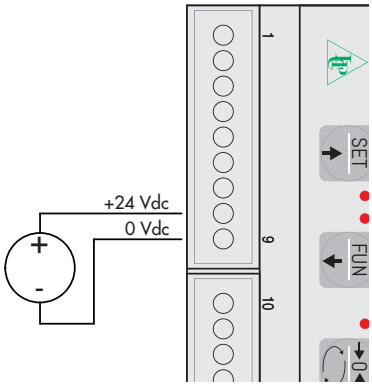

## CONNECTIONS OF THE LOAD CELL/S

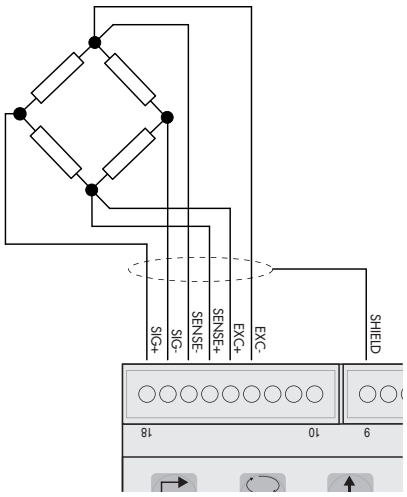


The cell/s cable must not be channeled with other cables, but must follow its own path.

The instrument can be connected up to a maximum of 8 load cells of 350 ohm in parallel. The supply voltage of the cells is 5 Vdc and is protected by temporary short circuit.

The measuring range of the instrument involves the use of load cells with a sensitivity of up to 3.5 mV/V.

The cable of the load cells must be connected to terminals 13-18. In the case of 4-wire load cell cable, jumper the terminals 13 to 16 and 14 to 15.

Connect the cell cable shield to the terminal 9.

In the case of the usage of two or more load cells, use special junction boxes (CEM4/C or CSG4/C). Below please find their connection.

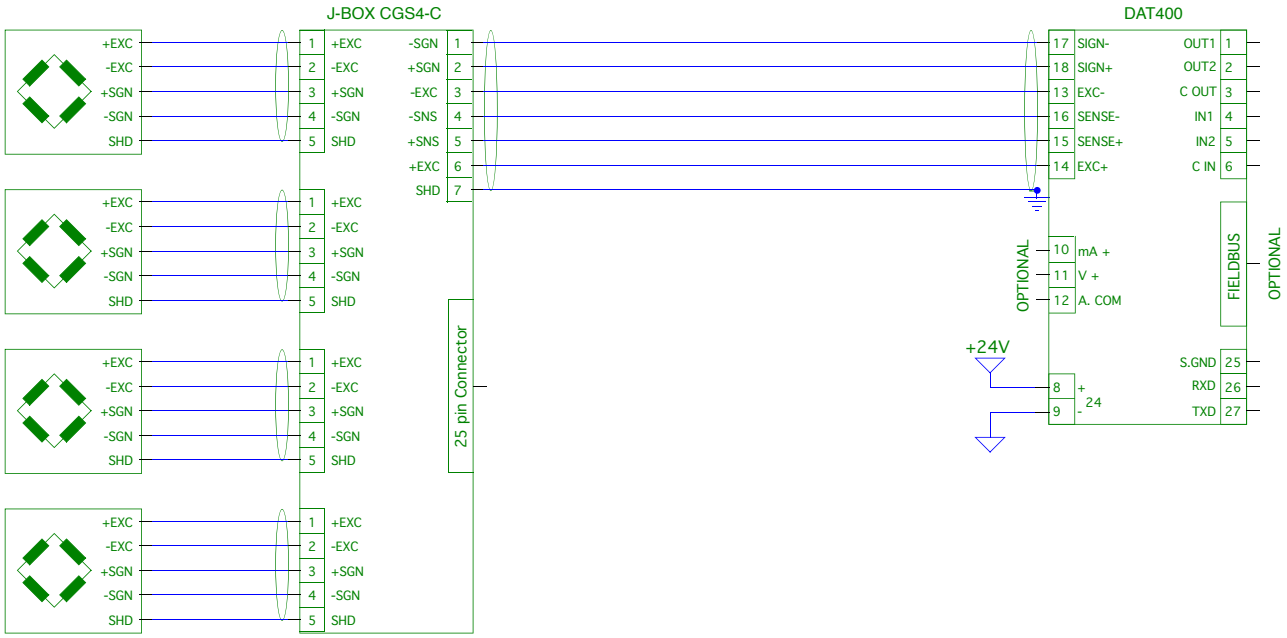


## LOGIC INPUTS

The two logic inputs are opto-isolated.

The cable connecting the logic input should not be channeled with the power cables.

The function of the two inputs is as follows:

INPUT1 Resetting the displayed value (gross, net or peak)

INPUT 2 PRINT

The activation of the two functions is accomplished by bringing the external power supply 24 Vdc to the corresponding terminals as shown in the figure.

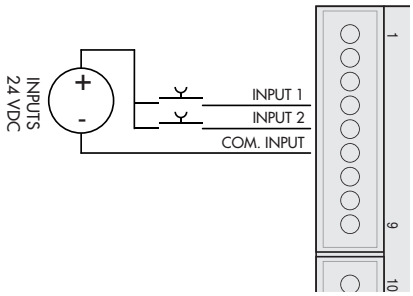

## LOGIC OUTPUTS

The two opto-isolated relay outputs are the normally open contact. The capacity of each contact is 24 Vdc, 100 mA max.

The cable connecting the outputs should not be channeled with the power cables. The connection should be as short as possible.

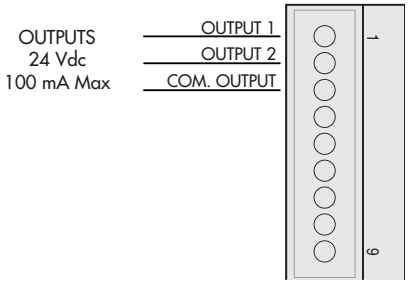


## SERIAL COMMUNICATION

### RS232:

The RS232 serial port is always present and handles various protocols.

To achieve the serial connection, use a shielded cable, making sure to connect the shield to one of the two ends: to pin 25 if connected on the side of the instrument, to the ground if it is connected on the other side.

The cable must not be channeled with power cables; the maximum length is 15 meters (EIA RS-232-C), beyond which you should take the optional RS485 interface.

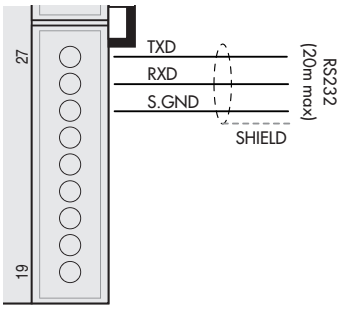

## PROFIBUS DP CONNECTION

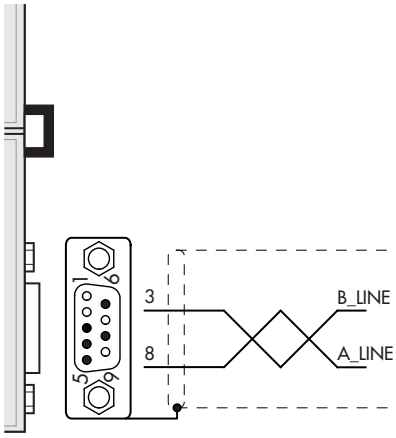


| Pin | Signal | Description |
|---|---|---|
| 1 | - | - |
| 2 | - | - |
| 3 | B line | +RxD/+TxD, level RS485 |
| 4 | RTS | Request to send |
| 5 | GND | Ground (isolated) |
| 6 | + 5V Bus Output | +5V termination (isolated) |
| 7 | - | - |
| 8 | A line | -RxD/-TxD, level RS485 |
| 9 | - | - |
| Housing | Cable shield | Internally connected to protective earth according to Profibus specification |

For connection to the Profibus Master, use a standard Profibus cable.

The typical impedance of the cable should be between 100 and 130 Ohms (f> 100 kHz). The cable capacity (measured between conductor and conductor) should be less than 60 pF / m and the minimum cable cross section should not be less than 0.22 mm2

In a Profibus-DP network, you can use either cable type A to type B cable, depending on the required performance. The following table summarizes the features of the cable to be used:

| SPECIFICATION | TYPE A CABLE | TYPE B CABLE |
|---|---|---|
| Impedance | from 135 to 165 ohm (f = 3 – 20 MHz) | from 100 to 300 ohm (f > 100 kHz) |
| Capacity | < 30 pF/m | < 60 pF/m |
| Resistance | < 110 ohm/km | - |
| Conductor cross section | > 0,34 $mm^2$ | > 0,22 $mm^2$ |

The following table shows the maximum length of the wires line with cable type A and type B, function of the different communication speed required:

| Baud rate (kbit/s) | 9.6 | 19.2 | 187.5 | 500 | 1500 | 3000 | 6000 | 12000 |
|---|---|---|---|---|---|---|---|---|
| Cable A lenght (m) | 1200 | 1200 | 1000 | 400 | 200 | 100 | 100 | 100 |
| Cable B lenght (m) | 1200 | 1200 | 600 | 200 | - | - | - | - |

For a reliable operation of the Fieldbus, should be used a line termination at both ends.

In the case of multiple DAT 400 instruments, use the line termination at only one instrument.

For configuring the instrument, the GSD file is available (hms_1810.GSD) that must be installed in the master.

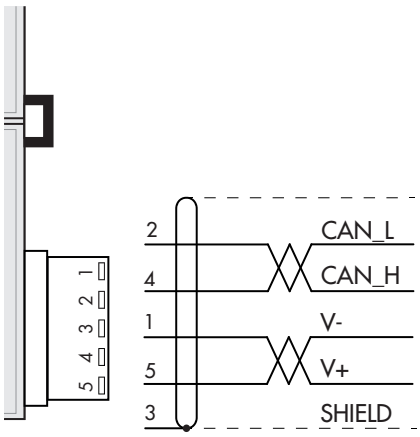


## DEVICENET CONNECTION

| Pin | Signal | Description |
|---|---|---|
| 1 | V- | Negative power bus |
| 2 | CAN_L | CAN low bus line |
| 3 | SHIELD | Schermo del cavo |
| 4 | CAN_H | CAN high bus line |
| 5 | V+ | Positive power bus |

To connect to the DeviceNet master, use a standard DeviceNet cable or shielded twisted-pair cable as shown on the diagram.

The cable must not be channeled with power cables. For reliable operation of the Fieldbus, should be used as a line termination of 121 Ω value between the terminal CAN_L and CAN_H.

For the configuration of the card is available ESD file that must be installed in the master.

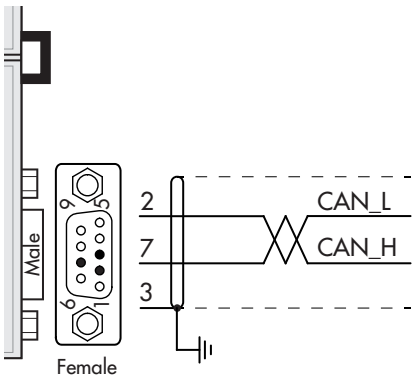


## CANOPEN CONNECTION

| Pin | Signal | Description |
|---|---|---|
| 2 | CAN_L | CAN low bus line |
| 3 | CAN_GND | |
| 7 | CAN_H | CAN high bus line |

CANopen is an higher-layer communication protocols based on a CAN seria bus system.

For the connection using a cable with a twisted pair differential and common return in accordance with ISO 11898. The length of the bus is limited by the speed of communication chosen according to the following table:

| Bit Rate | Max. Bus lenght |
|---|---|
| 1 Mbit/sec | 25 m |
| 500 Kbit/sec | 100 m |
| 250 Kbit/sec | 250 m |
| 125 Kbit/sec | 500 m |
| <=50 Kbit/sec | 1000 m |

Despite the theoretical maximum number of nodes in a CAN network is 127, the maximum number supported by the DAT 400 is 64.

The CAN line must have the resistance of 120Ω termination.

The reference CAN_GND must be connected to earth at one point of the line.

The cable can not be channeled with power cables.

For the configuration of the card is available ESD file that must be installed in the master.

# FRONT PANEL OF THE INSTRUMENT

The DAT 400 has a bright 6-digit display, 4 status LEDs and four keys.

In this operating mode the display shows the weight and the LEDs indicate the status of weight and the setpoints.

The set-up parameters are easily accessed and modified through the use of the three front buttons used

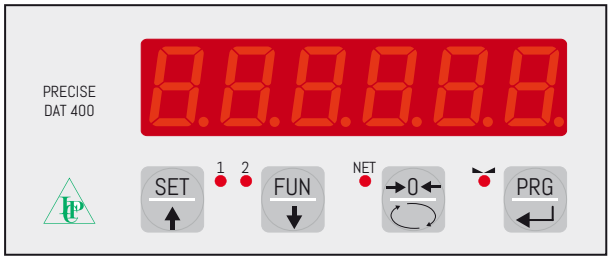


to select, edit, confirm and save the new settings.

## DISPLAY

On the 6-digit display, it's usually shown the scale weight. According to the various programming procedures, the display is used for programming of the parameters to be stored in the memory, or the messages that indicate the type of operation being carried out and help therefore the Operator in the management and programming of the instrument.

## LED INDICATORS

Below the display there are 4 LED indicators:

1 State of the logic output 1 (ON = closed contact OFF = open contact)

2 State of the logic output 2 (ON = closed contact OFF = open contact)

NET The displayed value is the net weight

0 IT indicates the condition of stable weight.

# USING THE KEYBOARD

The instrument is programmed and controlled through the keyboard which has 4 keys, with the following functions: The selection of one of the key functions is established automatically by the instrument according to the operation in progress. In general, the management of the programming menus is done by using the ↑ and ↓ keys to scroll through the items; the ↵key is used to enter its sub-menu or programmable parameter, while the ↳↰ button allows you exiting the menu or returning to the top level.

| KEY | FUNCTIONS DURING THE WEIGHT DISPLAY |
|---|---|
| SET ↑ | Access to the menu for the programming of the setpoints |
| FUN ↓ | Select the display view (gross weight, net weight).<br>(Long press) Selection of the weight/peak display |
| →0← | Resetting the displayed value (gross weight, net weight or peak).<br>(Press and hold for 5 sec.) Calibration of zero, to be executed only if its function is enabled in the PARAM menu (see item "0 ALL"). |
| PRG ↵ | Sending the weight string on the serial line.<br>(Long press) Access to the quick set-up menu. |
| PRG ↵ + SET ↑ | (Press for 3 sec) Access to the setup menu. |
| PRG ↵ + →0← | (Press for3 sec) It accesses the keypad lock/unlock menu and auto-off function of the display (see on the page 16). |

| KEY | FUNCTION DURING THE MAIN MENU DISPLAY |
|---|---|
| SET ↑ | It selects the next parameter. |
| FUN ↓ | It selects the previous parameter. |
| →0← | It exits the programming menu or returns to the upper level. |
| PRG ↵ | It accesses the corresponding sub-menu or programming or confirms the selected parameter. |

| KEY | FUNCTION WHEN SETTING THE NUMERICAL VALUES |
|---|---|
| SET ↑ | It increases the value of the flashing digit. |
| FUN ↓ | It decreases the value of the flashing digit. |
| →0← | It goes to the next digit. |
| PRG ↵ | It confirms the displayed value. |

| KEY | FUNCTION WHEN SETTING THE NUMERICAL VALUES |
|---|---|
| SET ↑ | It selects the next value. |
| FUN ↓ | It selects the previous value. |
| PRG ↵ | It confirms and store the displayed value. |

## EXIT FROM THE SETTING MENU

Press the →0← key to return to the main menu. Press the →0← . key again. It's displayed "StOrEP".

Press the PRG ↵ key to return to the main menu.

To exit without saving any changes, switch off the instrument instead of pressing the PRG ↵ key.

# INFO DISPLAY

When the instrument is switched ON, you can test the display, then in sequence you can display the identification code of the software and its version. Communication codes in the event of a request for assistance.

### ERRORS NOTIFICATION

In the operation mode, the display can report the following error codes.

| | |
|---|---|
| ------ | the weight applied to the load cell exceeds by more than 9 divisions the maximum capacity of the weighing system. |
| 0-L | Signal of the load cells absent or outside of the measurement range mV/V. |
| no con | Fieldbus network disconnected |
| E-PROF | PROFIBUS interface absent or not operating. |
| E-dNEt | DEVICENET interface absent or not operating. |
| E-CANP | CANOPEN interface absent or not operating. |
| ------ | Dash that runs along the perimeter of the display: BLIND function enabled. |
| ERRMEM | Memory error. Press the PRG key to reset the memory and return the parameters to their default values. NOTE: it is also deleted the calibration performed. |

# VIEWING, ZEROING THE WEIGHT AND AUTO TARE

After being calibrated, at the subsequent switches on, the display shows the current weight.

### VIEWING THE NET WEIGHT/GROSS WEIGHT

Press the FUN key to toggle between the net weight and the gross weight and vice versa. The value displayed is signaled by the LED NET (lit: net weight). If you have not entered the tare, the net weight is equal to the gross weight.

In case of negative weight, it is displayed the minus sign before the most significant digit.

### ZEROING, WEIGHT AND AUTO TARE

These two functions are performed by pressing →0← .

When the instrument is in the operation mode "Net" ("NET" LED on), the →0← key performs the self-calibration.

When the instrument is in operation mode "Gross" ("NET" LED off), the →0← key clears the gross weight.

### AUTO TARE

The execution of auto tare is possible under the following conditions:

- Instrument under conditions of "Net" (NET" LED on).
- Positive gross weight.
- Gross weight not greater than the maximum capacity.
- Stable weight.
- Unstable weight. In this condition, we must distinguish two cases:

1. The weight stability control is enabled (the parameter "MOTION" (*) must be other than zero): the command executed while the weight is unstable only has an effect if the weight stabilizes within 3 seconds from the moment the command was given.
2. The weight stability control is disabled (the parameter "MOTION" (*) is equal to zero): the executed command takes effect immediately, even with unstable weight.

*(*) The operating modes of the parameter "MOTION" are described at page 26*

The auto tare is retained in memory even after the power is turned off.

### ZEROING

The zero command of the gross weight is used to correct for small zero shifts of the weighing system during normal operation.

Normally these zero shifts are due to thermal drifts or to residues of material that accumulate on the weighing system over the time.

To run the command, it is necessary that the instrument is under conditions of "Gross" ("NET" LED off) and that the deviation of the weight with respect to the zero of the scale (the one performed with the calibration of zero) does not exceed (in positive or negative) the number of divisions set in parameter "0 BAND" (inside the PARAM menu; see page 28).

The zero command of the gross weight does not run if there is even one of the following conditions:

- Unstable weight (with control of the stability of the weight enabled). In this case, the reset command takes effect only if the weight stabilizes within 3 seconds or if the control of the weight stability is disabled (parameter "MOTION " equal to zero).
- Gross Weight greater (in positive or negative) than the number of divisions set in parameter "0 BAND" , when the setpoint of auto-calibration is not programmed.

The zero obtained with the resetting of the gross weight is retained in memory even after the power is turned off.

The zero operation of the gross weight can be repeated several times, but the number of reset divisions zero is added from time to time, so when the total exceeds the limit value set in parameter "0 BAND", the zero cannot be executed. In this case, it is necessary to calibrate the Zero.

Any auto-zero parameter setting when switching on (AUTO 0) reduces (or cancels, in the case of "AUTO 0"> "0 BAND") the range of action of the reset command.

### PEAK FUNCTION

The instrument continuously memorizes the peak value of the gross weight. The peak value is detected at the same frequency of acquisition of the weight (see table on filters). In addition to visualization, the peak value can be used in the following functions:

| FUNCTION | DESCRIPTION |
|---|---|
| LOGIC OUTPUT | The setpoints can be set to have the peak value as a reference. (See the procedure for setting the logic outputs operations). |
| SERIAL PORT | Acquisition of the peak value (peak hold) through the CONTIN, AUTO, DEMAND, and MODBUS SLAVE protocols. |
| ANALOG OUTPUT | The analog output value can assume the value of the peak (peak old). (See the procedure for setting the analog output). |

Press the FUN key and hold it for 3 seconds until the left of the display shows the letter "P".

## PROGRAMMING THE WEIGHT SETPOINTS

The set setpoint values are compared with the weight to drive its logic output. The comparison criterion is established in the process of set-up of the logic I / O (see relevant paragraph).

To access the Setpoint setting, press the SET key and follow the instructions on the table below.

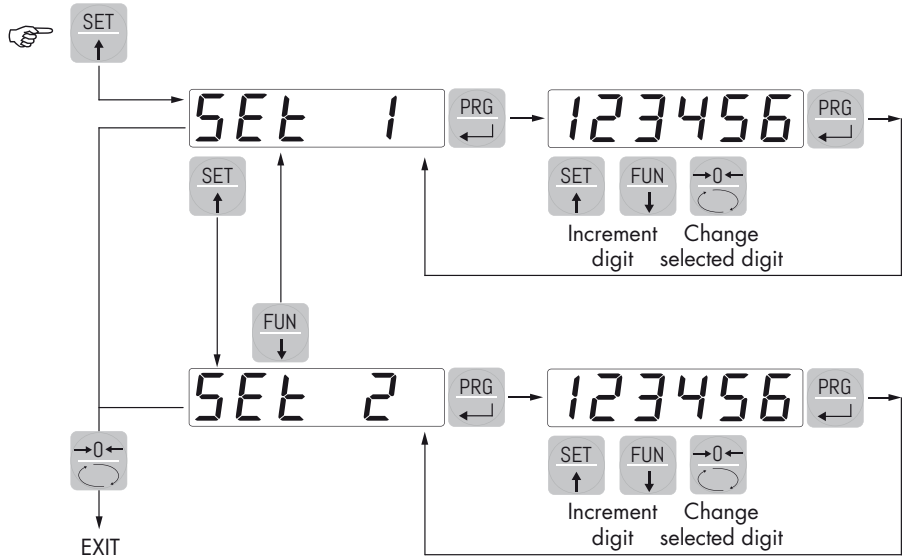


During the step of setting the setpoints, both outputs are disabled. If the setpoint value in memory is 0, the corresponding output is never enabled, regardless of the set-up of the selected setpoints. When the weight is not detectable or out of range, all outputs are disabled (contact open or closed depending on the MODE; see the relevant chapter).

## INPUT / OUTPUT FUNCTIONS

| | |
|---|---|
| **INPUT** | |
| 1 | Resetting the displayed value (gross weight, net weight or peak). Closed for 5 sec. -> Calibration of zero, to be executed only if its function is enabled in the PARAM menu (see item “0 ALL”). |
| 2 | Sending the weight string on the serial line or print. |
| **OUTPUT** | |
| 1 | Setpoint 1 |
| 2 | Setpoint 2 |

## KEYBOARD LOCK/UNLOCK FUNCTION

KEYBOARD LOCK/UNLOCK A function that allows you to enable or disable the keys individually. When the keys are locked, the only way to access these settings is to press and hold pressed the PRG + →0← keys for 3 seconds. For more information on the function, refer to the block diagram delow.

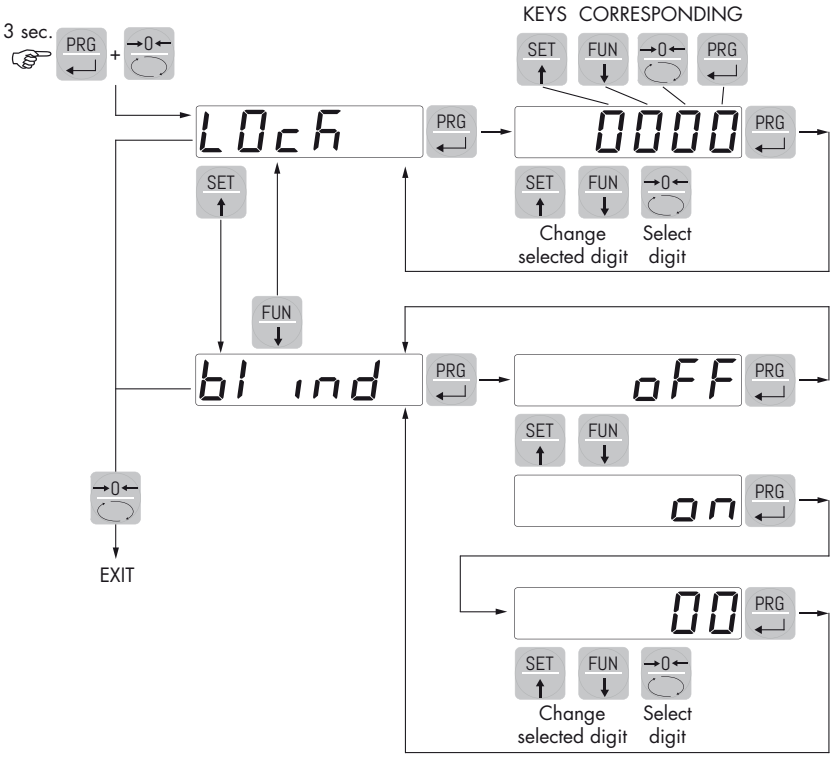


SWITCHING THE DISPLAY OFF This function allows turning off the display after a programmable time. You can select ON / OFF of the parameter BLIND and the setting of a time; the time count starts from the moment when, after exiting the setup menu, the display shows the weight value. After the set time, the display turns off and only a dash appears. This dash cycles through the perimeter of the display counterclockwise. When the display is off, also the 4 keys are disabled, regardless of how you set the keypad lock (LOCK). The only way to access the settings will be PRG + →0←. For more information on the function, refer to the block diagram.

# SETTING

## GENERAL DATA

All functions of the DAT 400 are activated and modified by accessing a simple setup menu, shown on the next page. All settings selected or activated remain stored even after switching off the transmitter.

The DAT 400 is preconfigured with a default setting. The following pages show the values of "Default" for each parameter.

With the first on-site installation, it's necessary to change some parameters in order to obtain a correct indication of the displayed weight (Theoretical adjustment).

This may be required when you purchase the DAT 400.

The settings of the setup menu can be changed using the front keys or via the utility "INOVATION" software supplied.

## CHANGING AND ENTERING THE PARAMETERS:

The setup parameters are grouped into a number of main menus.

To access the setup menu press the PRG key and then the SET key and hold down simultaneously for 3 seconds.

The display shows the message CONFIG that is the first of the main menus

Use the arrow keys to select the menu you want to change.

Press the PRG key to access the selected menu.

| KEY | FUNCTION DURING THE MAIN MENU PROGRAMMING |
|---|---|
| SET | It selects the next menu. |
| FUN | It selects the previous menu. |
| →0← | It exits the programming menu or returns to the upper level. |
| PRG | It accesses the corresponding sub-menu or programming or confirms the selected parameter. |

| KEY | FUNCTION WHEN SETTING THE NUMERICAL VALUES |
|---|---|
| SET | It increases the value of the flashing digit. |
| FUN | It decreases the value of the flashing digit. |
| →0← | It goes to the next digit. |
| PRG | It confirms and store the displayed value. |

| KEY | FUNCTION WHEN SETTING THE PROSED VALUES |
|---|---|
| SET ↑ | It selects the next value. |
| FUN ↓ | It selects the previous value. |
| PRG ↵ | It confirms and store the displayed value. |

The menu parameters can assume values that can be set or selected.

NOTE To exit and save the modified data, press multiple times the →0← key until the indicator returns to the operating mode.

# DIAGRAM OF THE PROFIBUS MENU

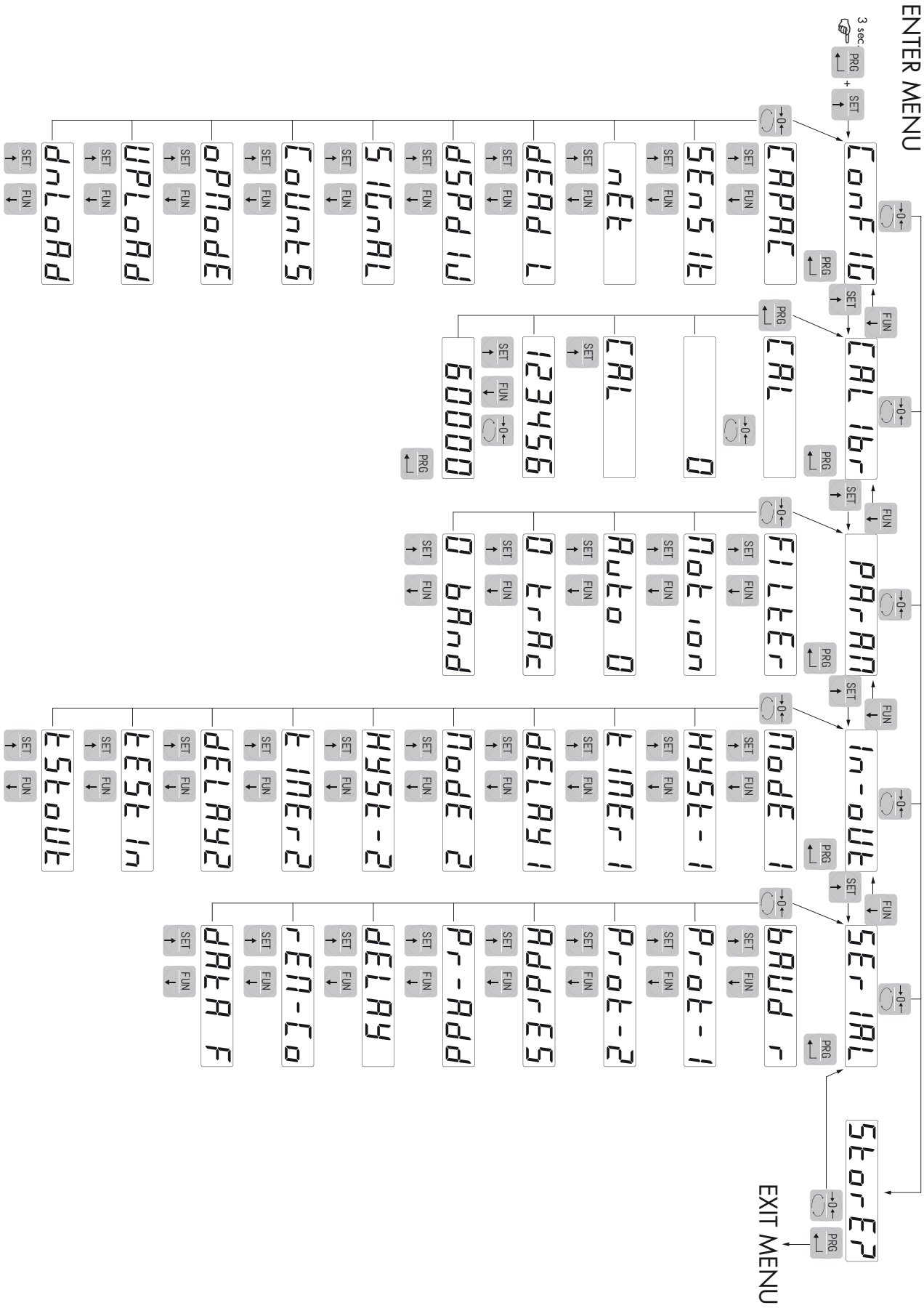

# DIAGRAM OF THE DEVICENET /CANOPEN MENU

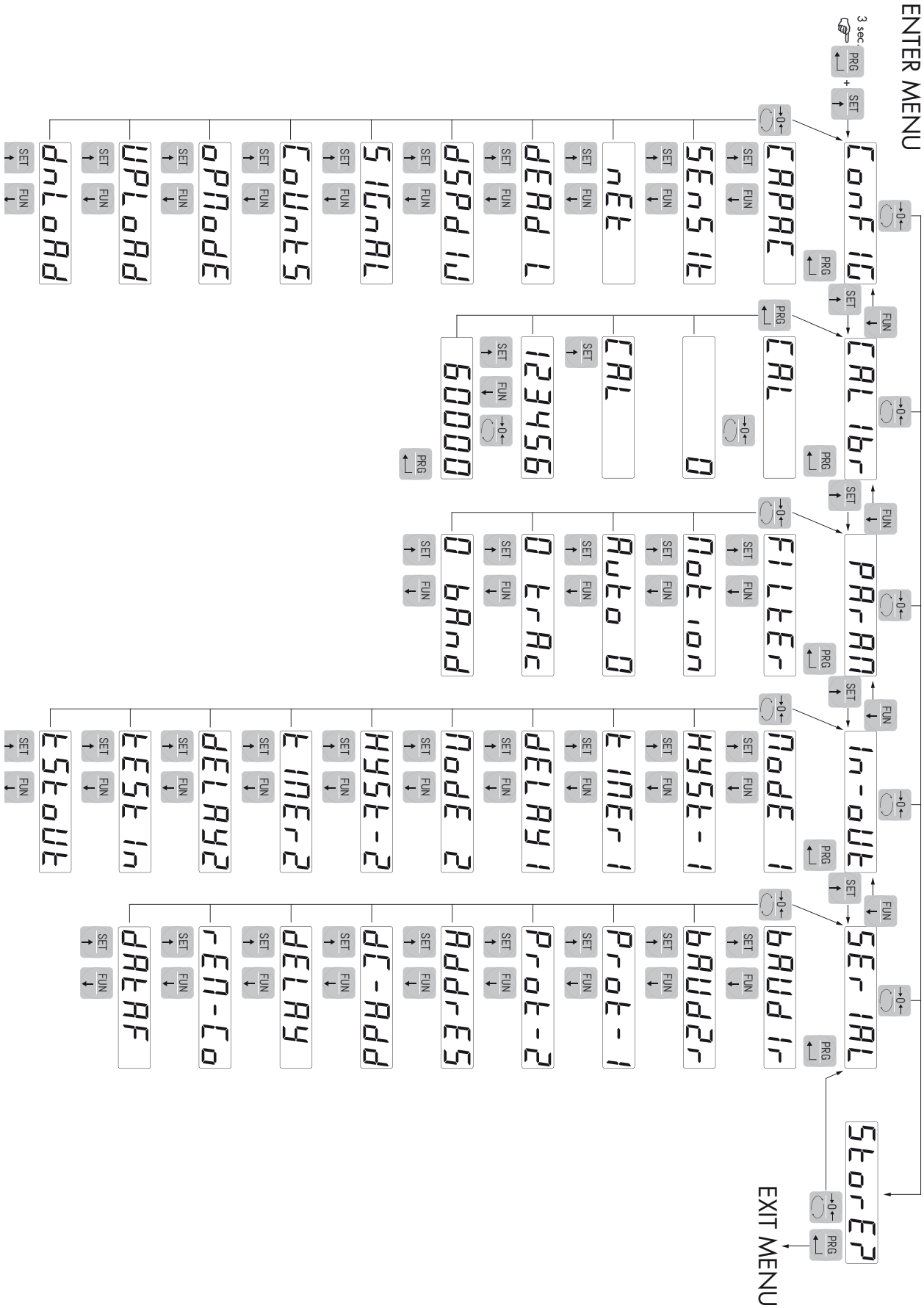

# QUICK SETUP MENU

ENTER MENU

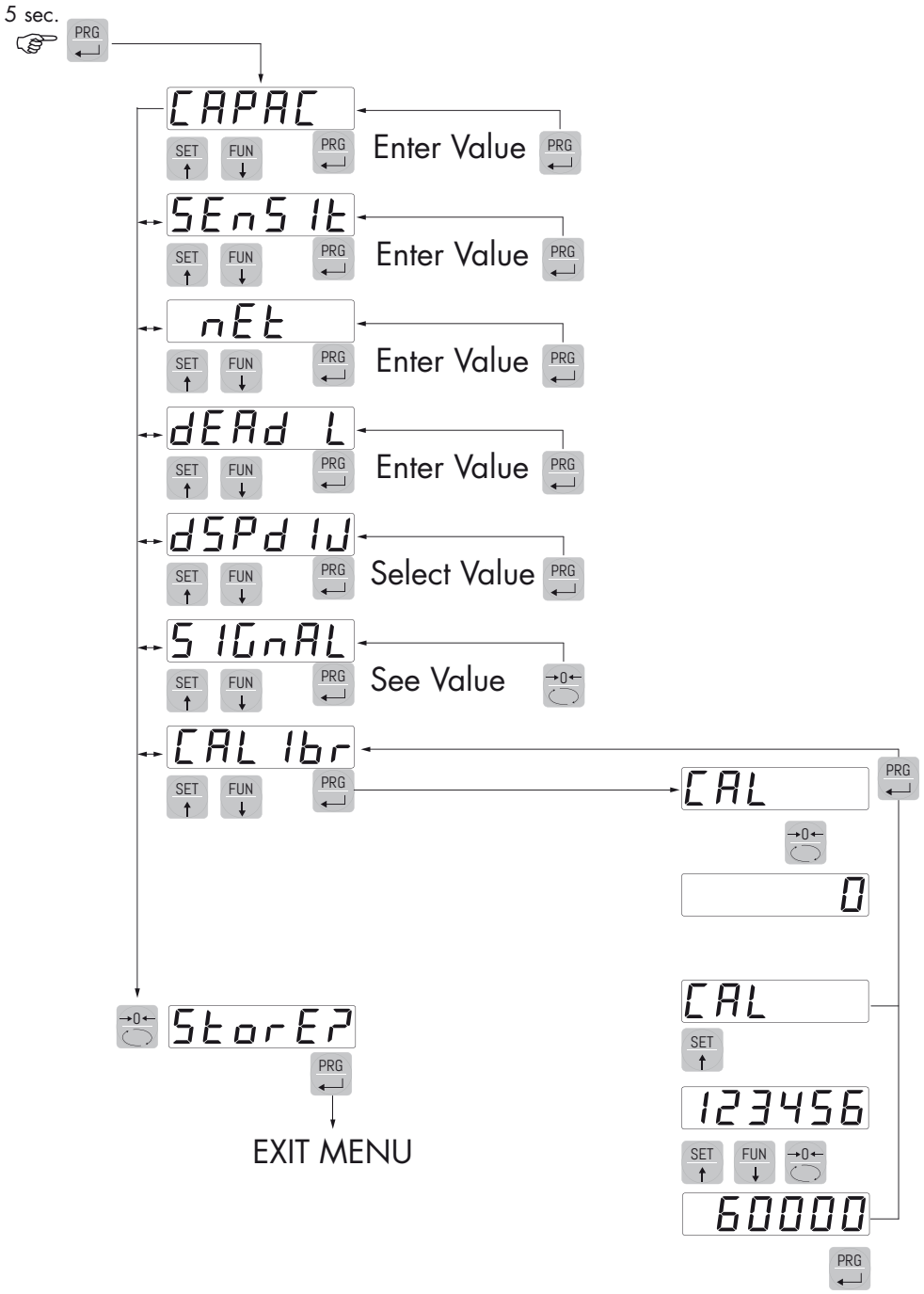

# RELATED TO THE SETTING PARAMETERS

Through the setting of the parameters listed below, the theoretical Full Scale DAT 400 calibration is performed. You must complete these steps with the zero calibration described on page 26. The procedure ensures a good accuracy of the system (maximum error <1% FS) if there are no mechanical problems.

Program the known values of total capacity and sensitivity of the load cells and the approximate values of net capacity and calibration. If the parameter SENSIT is not programmed, it is taken the 2.0000 mV / V value.

If the parameter CAPAC is programmed other than 0, according to the data CAPAC, SENSIT, NET and DEAD L , the instrument automatically runs the following functions:

Resetting the linearization points

Selection of the value of the division, however, to be modified, to the best of 10,000 divisions.

Calibration of the theoretical approximate calibration of the weight (zero and full scale).

Automatic programming of the overload setpoint (= NET).

These functions are performed each time you change one of the 4 parameters shown.

When you change the DSPDIV selection., it is automatically recalculated to full-scale calibration. The selections are incompatible with the calibration parameters or calibration in memory are not accepted.

The selection programmed in Opmode is read from the instrument when it is switched on and it makes that the instrument operates in that way.

### CAPAC CAPACITY OF THE WEIGHING SYSTEM

It defines the value corresponding to the sum of the rated capacity of the load cells. In the case of systems with only one load cell and "N" fixed supports, enter the capacity value of the cell for the total number of supports. This figure represents the full scale value of the weighing system.

Following the change of the parameter value, the theoretical tare of the weight is recalculated.

*Values: from 1 to 500000*

*Unit: the same of that displayed*

*Default: 10000*

### SENSIT LOAD CELLS SENSITIVITY

Set the value corresponding to the average sensitivity of the load cells, in mV / V. The instrument accepts values between 0.5 and 4 mV / V. If no value if programmed, it's assumed it is 2mV/V.

Following the change of the sensitivity value, the theoretical tare of the weight is recalculated.

*Values: from 0.5000 to 4.0000 mV/V*

*Default: 2.0000*

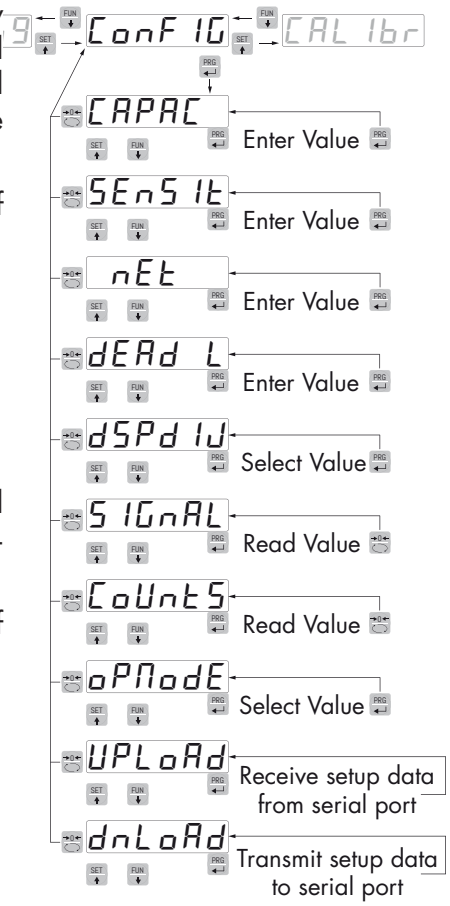

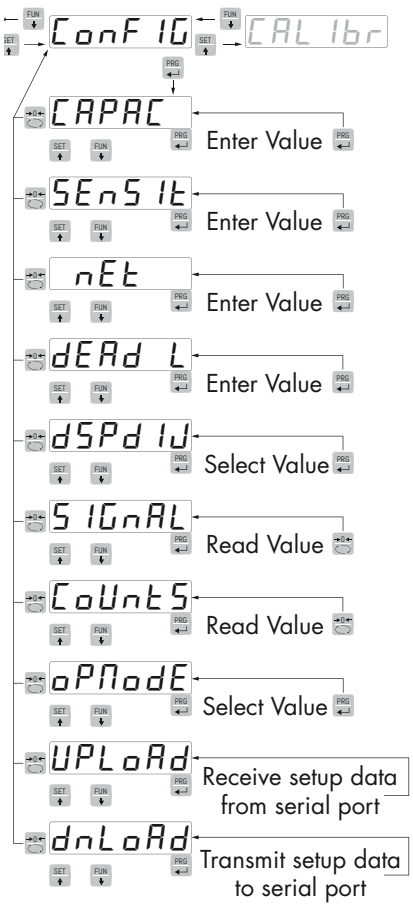


### nEt CAPACITY OF THE WEIGHING SYSTEM

Programming the net capacity of the weighing system. Values lower than 1/10 of CAPAC are not accepted.

*Values: from 1 to 500000*

*Unit: the same of that displayed*

*Default: 10000*

### dEAd L FIXED CALIBRATION OF THE WEIGHTING SYSTEM

Programming the fixed calibration value of the weighting system.

*Values: from 1 to 500000*

*Unit: the same of that displayed*

*Default: 00000*

### dSPdIU DIVISION VALUE

The ratio between the capacity of the system and the division value represents the resolution of the system (number of divisions).

Following the change of the capacity of the system, it is automatically selected the division value to the best of 10000 divisions.

Following the change of the division value, if the maximum capacity does not change, the calibration of the weight is automatically corrected.

*Value to be selected:*

*0.0001 - 0.0002 - 0.0005*

*0,001 - 0,002 - 0,005*

*0.01 - 0.02 - 0.05*

*0.1 - 0.2 - 0.5*

*1 -2 - 5*

*10 - 20 - 50*

*Default: 1*

### SIGnAL TESTING THE LOAD CELLS SIGNAL

It's displayed the signal acquired from the load cells expressed in mV/V.

### CoUnt5 A/D CONVERTER INTERIOR POINTS TEST

View of the interior points of the instrument (1,000,000 at the maximum input signal).

### oPModE SELECTION OF THE OPERATING MODE

Selection of the operating mode of the device (display) when it is switched on:

*Value to be selected:*

*GROSS, NET, PEAK*

*Default: GROSS*

### UPLoAd RECEIVING DATA FUNCTION

Receiving function from a serial of a file containing the setup data that will be automatically set in the instrument.

### dnLoAd SENDING DATA FUNCTION

Sending function from a serial of a file with the content of the setup memory of the instrument.

### EXAMPLE OF SETTING/CALIBRATION

You must weigh a tank, with empty weight of 750 kg and with a capacity of 1000 liters, containing a product with a specific gravity of 1.33 of which you want to read the weight with a display resolution of 0.2 Kg.

Before proceeding with the configuration, you should make sure that the load cells are connected properly to the unit and the tank is empty. Then you can set the parameters.

They are used:

Nr 3 load cells with capacity of 1000 kg

Sensitivity of respectively 2.0015, 2.0008 and 1.9998 mV/V (average value = 2.0007 mV/V)

Set the following valuesin the configuration parameters:

CAPAC = **3000**

SEnSIt = **2.0007**

nEt = **1500**

dEAd L = **0**

dSPdIU = **0.2**

Make sure that the value read in the SIGNAL parameter corresponds with the calibration weight of the system according to the following proportion:

3000:2.0007=750:X

Where X is the value of the signal expressed in mV/V corresponding to the theoretical value of the weight of the empty tank. The value should be about 0.5 mV/V.

Now you can proceed to the calibration described in the following paragraph, or you can exit the configuration menu by saving the data entered.

The instrument should indicate the value corresponding to the weight of the empty tank (for example 756.8).

You can re-access the configuration menu and enter the weight value read in the dEAd L parameter and enter the value 756.8.

Quit the configuration menu by saving the data.

For greater accuracy, prepare some sample weights or the pre-weighed material on a certified scale and calibrate as described in the next paragraph.

# CALIBRATION

The calibration described herein should be performed with the use of sample masses and/or product pre-weighed on a weighing scale.

Before proceeding with the calibration of the full scale, always perform the zero calibration.

During the calibration phase, the display shows the weight intermittently with the inscription CAL.

ATTENTION: If you turn off the instrument without exiting the set-up menu, the programming executed is not stored.

NOTE In the event that after calibration, the system shows linearity errors, you should verify that the weighted structure is completely free of mechanical constraints.

## ZERO CALIBRATION

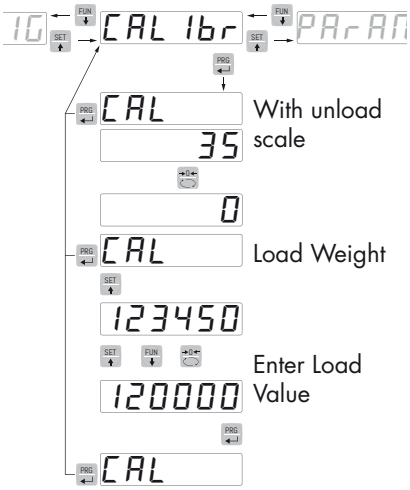


Perform the operation when the scale has no items (including the fixed tare), and when the weight is stable. The zero of the system is done by pressing the key 0. The display shows zero confirming the operation.

The weight displayed resets and the display shows CAl alternated by 0. You can repeat this operation more times.

## CALIBRATION OF FULL SCALE

Before you do this, load the sample weight on the scale and wait for the stabilization; the display shows a weight value.

Press the SET key to adjust the weight. The display shows the theoretical weight value with the first digit to the left that is flashing. With the arrow keys, enter the actual weight loaded on the scale starting from the first flashing digit. Switch to the next digit by pressing 0.

The confirmation of the last digit (far right) with the PRG key corrects the weight. The display shows CAL, by altering the actual weight value entered.

If the set value is higher than the resolution offered by the instrument, the weight is not accepted and the display shows an error message for a few seconds.

You can always repeat the calibration of the full scale.

Press the PRG key again to return to the CALIb. menu.

## EXIT FROM CALIBRATION MENU

The exit from the menu CALIbr is performed by pressing the →0← key until the appearance of the message StorE?.

To store the new calibration and exit the setup menu, press the PRG key.

You can cancel the calibration of zero and full scale.

FUN + →0← it cancels the zero calibration.

FUN + SET it cancels the calibration of the full scale.

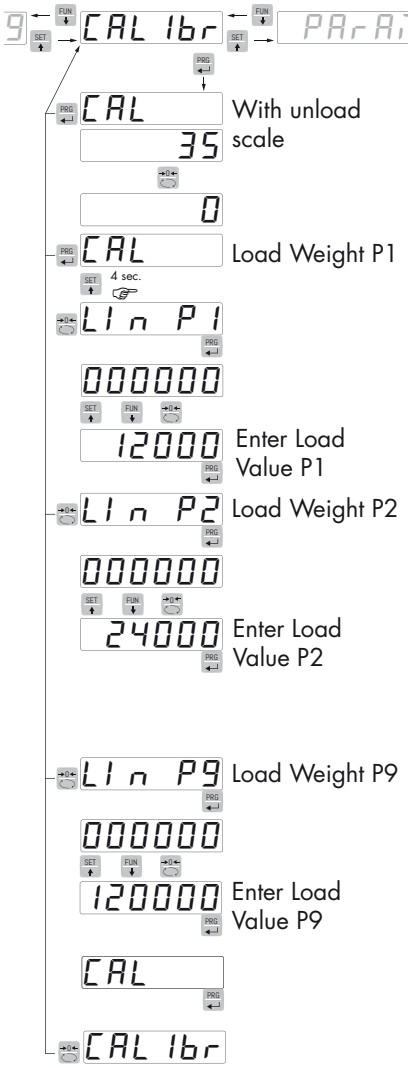


## LINEARIZATION PROCESS

We recommend using this procedure only in the presence of very critical applications on a mechanical level.

In the programming of the sample weight, values higher than the full scale or lower than the previous point or non-stable weight are not accepted. If the entered value is accepted, the next point is proposed, otherwise is still the same. The maximum number of "linearization points" is 9. It is possible to linearize even just one point of the scale.

The linearization points are automatically reset every time a theoretical calibration data is modified, or if a full scale calibration is performed.

**Required conditions to perform the procedure:**

The zero calibration must be already done.

In the calibration phase, when the "CAL" message flashes alternately with the weight value:

- Press the SET key and keep it pressed for 3 seconds.
- Release the key when the display shows the message "Lin P1" (linearization of the 1st point of the scale).
- Put the weight on the system corresponding to the 1st point (the value of the loaded weight is shown on the display alternately with the message "Lin P1").
- Press the PRG key to access the displayed value correction and set the correct value.
- Press the PRG button to validate the setting. The instrument automatically proposes linearization of the 2nd point of the scale (Lin P2).

Repeat the above sequence for all other linearisation points.

**If you want to finish the procedure, for example, after the 4 th calibration point, with the instrument that indicates "Lin P5", press the ZERO key. "CAL"message appears.**

- Press the PRG button. "CALIBR" message appears.
- Press the ZERO key. "STORE?" message appears. Press the PRG key to confirm and exit.

**In the event that we proceed with the linerizzazione of all 9 points, the instrument automatically exits the linearization procedure and the display shows "CAL" alternately with the weight value.**

- Press the PRG button. "CALIBR" message appears.
- Press the ZERO key. "STORE?" message appears. Press the PRG key to confirm and exit.

**NOTE. At the end of the linearization procedure, do not perform any ZERO calibration to avoid losing the linearization just performed. If necessary, repeat the entire procedure.**

# WEIGHTING PARAMETERS

The parameters in this menu allow you to adjust the timing of the acquisition and updating of the display and the manual or automatic zeroing that the transmitter performs.

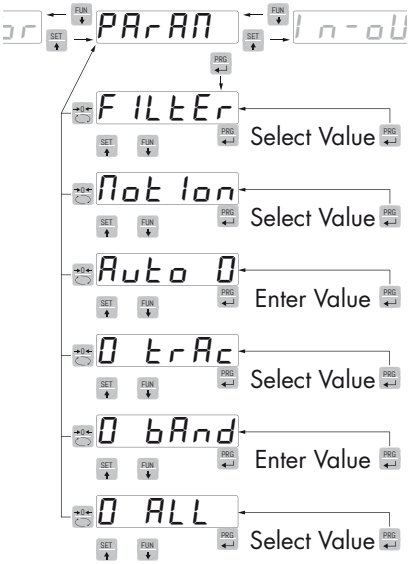


### FILTER **WEIGHT FILTER**

This parameter adjusts the refresh speed of the display and the serial and analog output.

Low values of the filter speed up the display refresh.

High values of the filter slow down the display refresh.

| Value | Update | Response |
|---|---|---|
| *0* | *50 Hz* | *25 Hz* |
| *1* | *50 Hz* | *16 Hz* |
| *2* | *25 Hz* | *8 Hz* |
| *3* | *25 Hz* | *5 Hz* |
| *4* | *25 Hz* | *2.5 Hz* |
| *5* | *10 Hz* | *1.5 Hz* |
| *6* | *10 Hz* | *1 Hz* |
| *7* | *10 Hz* | *0.7 Hz* |
| *8* | *5 Hz* | *0.4 Hz* |
| *9* | *5 Hz* | *0.2 Hz* |

Default: *5*

### Motion **WEIGHT STABILITY**

This parameter defines the divisions number needed to deem the weight stable.

A large number of divisions allows the transmitter to detect quickly the weight stability, which is needed when executing tare and print commands.

| Value | Change |
|---|---|
| 0 | Always stable weight |
| 1 | Stability determined quickly |
| 2 | Stability determined with medium parameters |
| 3 | Stability determined accurately |
| 4 | Stability determined with the highest accuracy |

*Default: 2*

### Auto 0 **AUTOZERO UPON SWITCHIN ON**

This parameter defines the value of the maximum resettable weight when the instrument is switched on.

This operation corresponds to a zero calibration of the system and is executed only if the weight is stable and below the set value.

*Value from 0 to the value of the CAPAC parameter.*
*Default: 0*

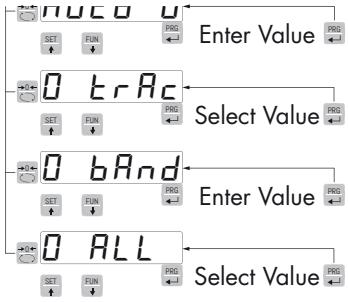


### 0 trAc TRACKING THE ZERO

This function allows you to perform a momentary zero calibration compensating for the temperature drift of the weight.

When you switch off the transmitter, it automatically returns to the previous zero calibration.

The maximum weight resettable by this parameter is 2% of the range of the system.

To disable this feature, use the value 0.

| Value | Change |
|---|---|
| 0 | Control OFF |
| 1 | 0.5 div/sec |
| 2 | 1 div/sec |
| 3 | 2 div/sec |
| 4 | 3 div/sec |

Default: 0

### 0 bAnd ZERO BAND

This parameter defines the number of divisions resettable by the pressure of the front button of zero or by Input 1.

*Values: from 0 to 200*
*Default: 100*

# INPUT/OUTPUT PARAMETERS

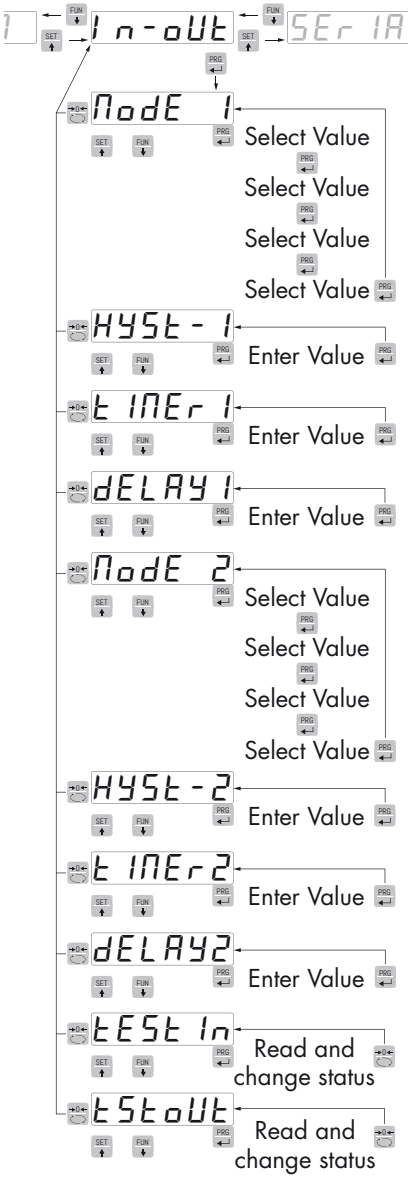


### ModE 1 SETPOINT 1 OPERATION MODE

Select 4 operation criteria of the setpoint 1 in sequence:

*NET* *The relay output is active in Net Weight mode*
*GROSS* *The relay output is active in Gross Weight mode*
*PEAK* *The relay output is active in Peak mode*
*Default: GROSS*

Comparison with the net weight, gross weight or the peak. In this last case, the comparison is made with the last peak value acquired, even when the peak function is not active.

*N.O.* *The relay 1 is normally open*
*N.C.* *The relay 1 is normally closed*
*Default N.O.*
*POS.* *The output is operating with positive weight*
*NEG.* *The output is operating with negative weight*
*Default: POS*
*NORML* *Output 1 is active with unstable weight*
*STABL* *The output is active with stable weight*
*Default: Norml*

### HYSt-1 HYSTERESIS OF THE SETPOINT 1

Hysteresis value than the setpoint value set

*Value: from 0 to 999*
*Default: 2*

### t IMEr 1 SETPOINT 1 TEMPORIZATION

Value of time, in tenths of a second, during which, when the weight value set is overcome, the output relative to setpoint 1 remains enabled.

After this time, even if the weight value is still above the setpoint, the output is automatically disabled.

The function is not activated if the programmed time is equal to zero.

*Value: from 0 to 999*
*Default: 0*

### dELAY 1 SETPOINT 1 DELAY

Value of time, in tenths of a second, after which, when the weight value set is overcome, the output relative to setpoint 1 remains enabled.

The function is not activated if the programmed time is equal to zero.

*Value: from 0 to 999*
*Default: 0*

### MODE 2 SETPOINT 2 OPERATION MODE

Select 4 operation criteria of the setpoint 2 in sequence:

*NET* *The relay output is active in Net Weight mode*

*GROSS* *The relay output is active in Gross Weight mode*

*PEAK* *The relay output is active in Peak mode*

*Default: GROSS*

Comparison with the net weight, gross weight or the peak. In this last case, the comparison is made with the last peak value acquired, even when the peak function is not active.

*N.O.* *The relay 2 is normally open*

*N.C.* *The relay 2 is normally closed*

*Default N.O.*

*POS.* *The output is operating with positive weight*

*NEG.* *The output is operating with negative weight*

*Default: POS*

*NORML* *Output 2 is active with unstable weight*

*STABL* *Output 2 is active with stable weight*

*Default: Norml*

### HYST-2 HYSTERESIS OF THE SETPOINT 2

Hysteresis value than the setpoint value set

*Value: from 0 to 999*

*Default: 2*

### TIMER2 SETPOINT 2 TEMPORIZATION

Value of time, in tenths of a second, during which, when the weight value set is overcome, the output relative to setpoint 2 remains enabled.

After this time, even if the weight value is still above the setpoint, the output is automatically disabled.

The function is not activated if the programmed time is equal to zero.

*Value: from 0 to 999*

*Default: 0*

### DELAY2 SETPOINT 2 DELAY

Value of time, in tenths of a second, after which, when the weight value set is overcome, the output relative to setpoint 2 remains enabled.

The function is not activated if the programmed time is equal to zero.

*Value: from 0 to 999*

*Default: 0*

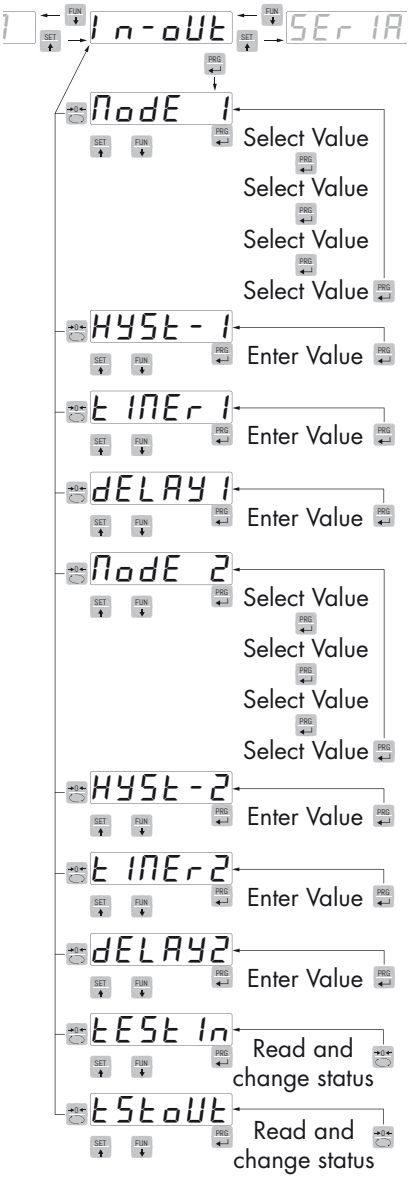

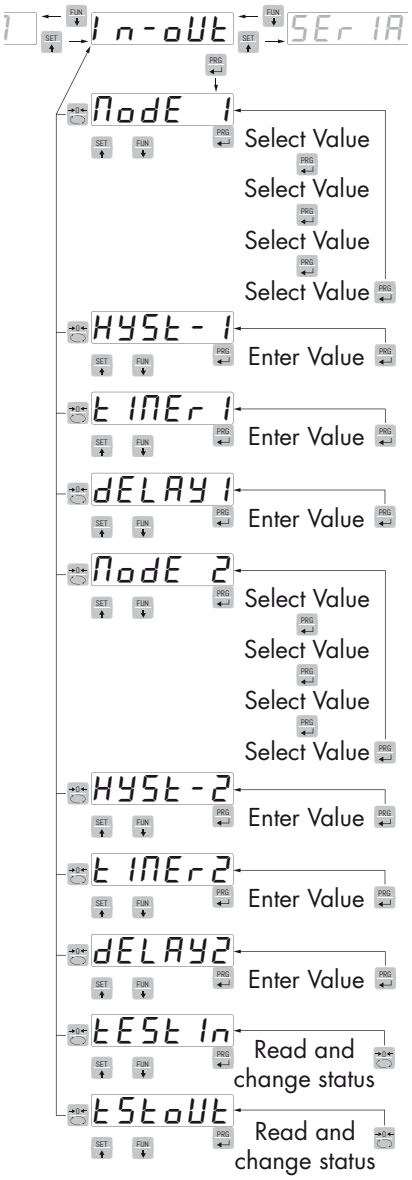


## tESt In LOGIC INPUTS TEST PROCEDURE

The display shows the inputs status.

0 = input disabled

1= input activated.

The input 1 corresponds to the 1a value on the left.

Enable and disable the inputs to check the corresponding state on the display. During this procedure, the normal function of the inputs is not active. Use this procedure only to check the hardware.

## tStoUt LOGIC OUTPUTS TEST PROCEDURE.

The display shows the outputs status.

0 = output disabled, 1= output activated.

The input 1 corresponds to the 1a value on the left.

During this procedure, the LEDs reflect the state of the outputs. To set the digits, use the keys as for the numeric settings.

During this procedure, the normal function of the outputs is not active. Use this procedure only to check the hardware.

# SERIAL OUTPUT PARAMETERS

This menu allows you to configure the serial ports COM1 and COM2 and the associated communication parameters. The instrument has always COM1 serial port (RS232 or USB), and an RS485 serial port (COM2) which are optionally linked via the following Fieldbus: Profibus-DP, DeviceNet and CANopen.

We recommend the use of the USB port configuration only through the software INOVATION.

### bAudr BAUD RATE COM1 (PROFIBUS VERSION)

### bAud 1r BAUD RATE COM1 (DEVICENET/CANOPEN VERSION)

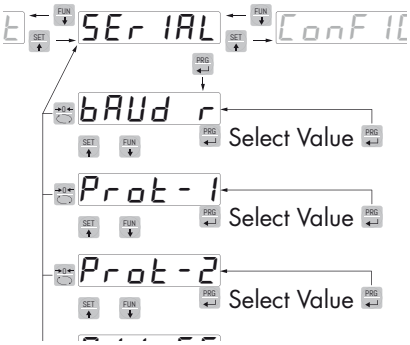


It defines the baudrate of the serial port RS232.

The value must be set to the same value of the PC / PLC or remote display.

Value to be selected:

*2400*
*9600*
*19200*
*38400*
*115200*
*Default: 9600*

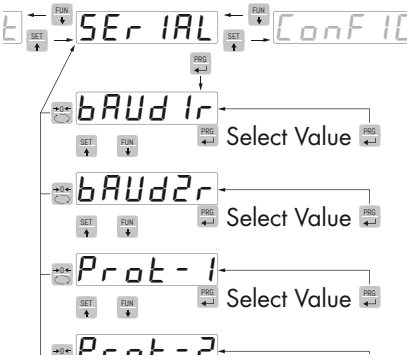


### bAud2r BAUD RATE COM2 (DEVICENET/CANOPEN VERSION)

### BAUDR2 BAUD RATE COM2

It defines the baudrate of the DEVICENET or CANOPEN interface.

The value must be set to the same value of the PC/PLC.

*Value to be selected:*
*125 250 500 DeviceNet*
*LSS, 20, 50, 125, 250, 500, 800, 1 M, AUTO Canopen*
*Default:*
*125 DeviceNet*
*500 Canopen*

### Prot-1 COM1 PROTOCOL

It defines how to use the serial port RS232

**None:** Serial communication OFF

**Contin:** Continuous transmission of the weight string. It can be used, for example, to drive a weight repeater. See details in the relevant paragraph.

**Demand:** When the Operator presses the front button or through Input 2, a string of weight is transmitted. The command is accepted if the weight is stable. Between two consecutive transmissions the weight must have a variation of at least 20 divisions.

**Autom:** It's automatically transferred to a string of weight when the weight stabilizes at a value higher than the minimum weight (20 divisions). Between two consecutive transmissions, the weight must have a variation of at least 20 divisions.

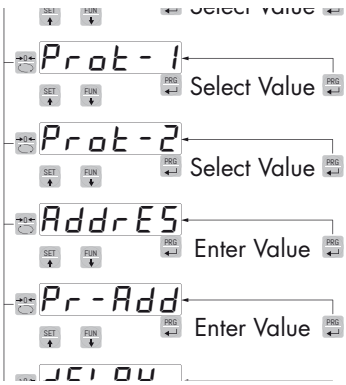


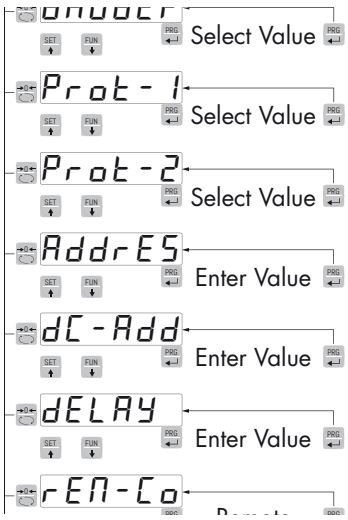


**Slave:** ASCII protocol. See details in the relevant paragraph.

**Mdobus:** MODBUS RTU protocol (slave) can be used only if "PROT-2" is configured = "NONE".

*Value to be selected:*

*n-8-1*

*n-8-2*

*E-8-1*

*o-8-1*

*Default: n-8-1*

**Print:** Data transfer to the Custom Plus or Custom FT190 printer.

*Value to be selected:*

*None*

*Contin*

*Demand*

*Autom-*

*Slave*

*Modbus*

*Print*

*Default: Modbus*

### Prot-2 COM2 PROTOCOL:

It defines the Fieldbus use mode

**None:** Serial communication OFF

**PROFIB:** PROFIBUS fieldbus (if there is an optional board)

**DEVNET:** DEVICENET fieldbus (if there is an optional board)

**CANOPN:** CanOpen fieldbus (if there is an optional board)

*Value to be selected:*

*None*

*Profib*

*Devnet*

*Canopn*

*Default: None*

### AddrES COM1 SERIAL COMMUNICATION ADDRESS

Configuration of the address used in the transmission protocols and in the MODBUS protocol.

*Value from 01 to 99.*

*Default: 01*

### Pr-Add PROGRAMMING OF THE PROFIBUS ADDRESS

Configuration of the address used in the PROFIBUS protocol.

*Values: from 0 to 126*

*Default: 01*

## dC-Add PROGRAMMING OF THE DEVICENET OR CANOPEN ADDRESS

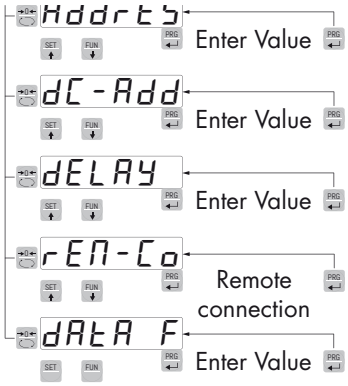


Programming of the address used in DEVICENET or CANOPEN protocol.

*Value: from 0 to 63*

*Default:01*

## dELAY DELAYED RESPONSE OF THE SLAVE AND MODBUS RTU COM1 PROTOCOLS

Indicative delay of the response string used in the SLAVE protocol. (expressed in 1/100 sec., max 1 sec).

This value is expressed in milliseconds and represents the delay with which the instrument sends the response to the request received from the master.

*Value: from 0 to 999 msec*

*Default: 000*

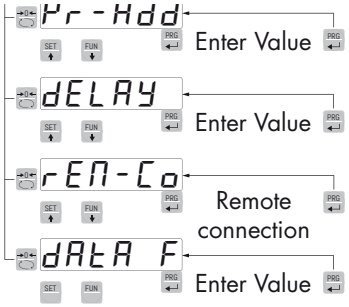


## rEM-Co REMOTE COMMUNICATION

It enables communication with a PC for the setting via the INOVATION program

## dAtA F REMOTE COMMUNICATION

Parameters of the serial COM1 protocols (parity, bits n., stop bits) except MODBUS.

*Value to be selected:*

*n-8-1*

*n-8-2*

*E-8-1*

*o-8-1*

*n-7-2*

*E-7-1*

*E-7-2*

*o-7-1*

*o-7-2*

*Default: n-8-1*

# SERIAL COMMUNICATION PROTOCOLS

*Fieldbus and Modbus RTU protocols, although managed on two different communication ports (COM1 and COM2), can not be used simultaneously.*

*It follows that the Modbus RTU protocol on COM1 is selected only if it is not selected fieldbus protocol on COM2 serial port and vice versa.*

## CONTINUOUS, AUTOMATIC AND MANUAL TRANSMISSION PROTOCOL

These protocols have been programmed into their programming menu.

The string is transmitted as follows:

| | | | | | | | |
|---|---|---|---|---|---|---|---|
| STX | <status> | <net weight> | <gross weight> | <peak> | ETX | <chksum> | EOT |

Where

STX (start of text) = 0x02h

ETX (end of text) = 0x03h

EOT (end of transmission) = 0x04.

<status> = an ASCII character that can take the following values:

"S" = stable weight

"M" = weight that is not stable (moving)

"O" = weight greater than the maximum capacity

"E" = weight that cannot be detected.

<net weight> = field consisting of 6 ASCII characters of net weight.

<gross weight> = field consisting of 6 ASCII characters of gross weight.

<peak> = field consisting of 6 ASCII characters of peak.

<chksum> = 2 ASCII control characters calculated considering the characters between STX and ETX excluded. The control value is obtained by executing the operation of XOR (or exclusive) of the 8-bit ASCII codes of the characters considered. The result is a character that is expressed in hexadecimal with 2 digits that can take values from "0" to "9" and "A" to "F".

<chksum> is the ASCII encoding of the two hexadecimal digits.

*In the case of continuous communication protocol, the given string is transmitted at a frequency of 10 Hz, regardless of the weight filter selected.*

*In the case of automatic and manual communication protocols, between 2 successive transmissions of weight, they must undergo a corresponding change of at least 20 divisions.*

**SLAVE TRANSMISSION PROTOCOL**

LIST OF THE CONTROLS AVAILABLE:

- Request for the net and gross weight and current peak.
- Change in gross weight.
- Change in net weight.
- Command of reset or automatic calibration or peak reset.
- Programming the two setpoints of weight
- Requesting the programmed setpoints.
- Control of setpoints storage in permanent memory.

The unit connected to the instrument (typically a personal computer) acts as a MASTER and is the only unit that can start a process of communication.

The process of communication must be made by the transmission of a string by the MASTER, followed by a reply from the SLAVE concerned.

**CONTROLDS FORMAT DESCRIPTION:**

The double quotes enclose constant characters (observe upper and lower case); the <and> symbols contain variable numeric fields.

REQUEST FOR THE NET AND GROSS WEIGHT AND CURRENT PEAK

Master: <Addr> “N” EOT

DAT 400: “N” <Addr> <status> <net> <gross> <peak> ETX <chksum> EOT

CHANGE IN GROSS WEIGHT

Master: <Addr> “C” “L” EOT

DAT 400: <Addr> “C” “L” ACK EOT

CHANGE IN NET WEIGHT

Master: <Addr> “C” “N” EOT

DAT 400: <Addr> “C” “N” ACK EOT

COMMAND OF RESET OR AUTOMATIC CALIBRATION OR PEAK RESET

Master: <Addr> “A” “A” EOT

DAT 400: <Addr> “A” “A” ACK EOT

PROGRAMMING TWO WEIGHT SETPOINS

Master: <Addr>  “S” <s1> <s2> ETX <csum> EOT

DAT 400: <Addr> “S” ACK EOT

REQUESTING FOR THE PROGRAMMED SETPOINT

Master: <Addr>  “R” EOT

DAT 400: <Addr> “R” <s1> <s2> ETX <csum> EOT

STORING THE WEIGHT Setpoint IN A PERMANENT MANNER

Master: <Addr>  “M” EOT

DAT 400: <Addr> “M” ACK EOT

In the case of communication error or otherwise unrecognized command from DAT 400, it will respond with the following string:

DAT 400: <Addr> NAK EOT

FIELDS DECRIPTION

The double quotes enclose constant characters (observe upper and lower case); the <and> symbols contain variable numeric fields.

<addr> = Serial communication address of the instrument; it is the ASCII character obtained by adding 80h to the number of address (i.e. address 1: <Addr> = 80h + 01h = 81h).

<csum> = checksum of the string data. It is calculated by performing the exclusive OR (XOR) of all characters from <Addr> to ETX excluded the latter; the result of the XOR is decomposed into 2 characters by considering separately the upper 4 bits (first character) and lower 4 bits (second character); the 2 characters obtained are then ASCII encoded (example: XOR = 5Dh; <csum> = "5Dh" namely 35h and 44h).

ETX (end of text) = 0x03h,

EOT (end of transmission) = 0x04h,

ACK (acknowledgment) = 0x06h,

NAK (No acknowledgment) = 0x15h.

<status> = an ASCII character that can take the following values:

"S" = stable weight

"M" = weight that is not stable (moving)

"O" = weight greater than the maximum capacity

"E" = weight that cannot be detected.

<s1>...<s2> = 6 ASCII characters of setpoint.

<net weight> = 6 ASCII characters of net weight.

<gross weight> = 6 ASCII characters of gross weight.

<peak> = 6 ASCII characters of peak.

If the request is made cyclically, you can acquire the weight with a maximum frequency of:

| Frequency | Baud Rate |
|---|---|
| 200Hz | 115200 |
| 50Hz | 38400 |
| 35Hz | 19200 |
| 25Hz | 9600 |
| 8Hz | 2400 |

## MODBUS RTU PROTOCOL (USED ONLY WITHOUT FIELDBUS

The addresses listed in the tables below follow the standard address specified in the guidelines of the Modicon PI-MBUS-300. Below please find an excerpt that helps the user to communicate with the instrument.

*"All data addresses in Modbus messages are referenced to zero. The first occurrence of a data item is addressed as item number zero. For example:*

*The coil known as 'coil 1' in a programmable controller is addressed as coil 0000 in the data address field of a Modbus message.*

*Coil 127 decimal is addressed as coil 007E hex (126 decimal).*

*Holding register 40001 is addressed as register 0000 in the data address field of the message. The function code field already specifies a 'holding register' operation. Therefore the '4XXXX' reference is implicit."*

The Modbus protocol writes directly into the memory of the instrument.

Use caution when sending data to the instrument: the data being sent must be within the specified ranges given in the tables on the following pages and and must ensure the proper functioning of the instrument.

Some of the data is written into the E2prom's memory (refer to the column in the tables "Stored in E2prom") for additional information. This memory can only be written to 100,000 times, therefore, you should avoid writing continuously into this memory.

To confirm the storage of a new value in the E2prom, perform the MAKE - BACKUP function. See Command register table.

If this function is not performed, all of the newly stored data will be lost when power is removed from the instrument.

The "Set point" setting does not require the MAKE - BACKUP function to be performed.

The set point values are expressed as number of divisions

This means that any set point value (temporary or permanent) has to be multiplied by the "Display division" data, in order to obtain the actual value of the set point.

E.G. Assuming that the "display division" value is 0.2; if the PLC asks for a set point value and get the data "3949" from the instrument, this means that the actual value of the set point is 789.8

(3949 x 0.2 = 789.8)

Even the other weight values are given as number of divisions, except for the "Net weight" and "Gross weight".

"Net weight" and "Gross weight" (Modbus addresses 40006 and 40007) are given as absolute values

If not specified otherwise, the numerical values (such as addresses, codes and data) are expressed as decimal values.

## INSTRUMENT RESPONSE TIMES

In order to respond to most requests, the instrument takes a maximum time of 20 msec.

Exceptions are:

- the e2prom Backup command (max time = 350mSec.)
- writing of the registers of the cells capacity, cells sensitivity, net weight of the weighing, system calibration, filter (max time = 550mSec).

## SUPPORTED FUNCTIONS

| Function | Description |
|---|---|
| 01 (01) | READ COIL STATUS (Reading the state of the logic outputs) |
| 02 (02) | READ INPUT STATUS (Reading the state of the logic inputs) |
| 03 (03) | READ HOLDING REGISTERS (Reading the programmable registers) |
| 04 (04) | READ INPUT REGISTERS (Reading the "read only" registers") |
| 05 (05) | FORCE SINGLE COIL (Writing the status of each output) |
| 06 (06) | PRESET SINGLE REGISTER (Writing a programmable register) |
| 15 (0F) | FORCE MULTIPLE COILS (Multiple writing of outputs) |
| 16 (10) | PRESET MULTIPLE REGISTERS (Multiple writing of registers) |

*The values in brackets are the hexadecimal representation of decimal values.*

*Each single function is explained in detail on pages 34, 35 and 36 of the operator's manual.*

*Each function is composed by a Query (request master instrument) and a Response (answer instrument master). Queries and responses are composed by a sequence of data that are briefly explained here below (***), please note that the code "0x" before any value indicates that the value is represented as hexadecimal value.*

*Besides, all the Modbus addresses (the ones mentioned in the left end column on pages 38 and 39) have to be represented as hexadecimal values, but, only for these addresses, there is an important rule to be taken into consideration:*

*Before converting the address into an hexadecimal value, the 1st digit on the left has not to be considered and the remaining 4 digits have to be decremented by "1".*

*1st EXAMPLE:*

*To represent the address 40150 ("display division" ) as hexadecimal value, exclude the digit "4" (remains "0150"), then decrement by 1 the number "0150". The result is "0149", now perform the conversion into hexadecimal. The result is "00 95". This is the value to be used in the query.*

*2nd EXAMPLE:*

*To represent the address 40402 ("analog outpu type" ) as hexadecimal value, exclude the digit "4" (remains "0402"), then decrement by 1 the number "0402". The result is "0401", now perform the conversion into hexadecimal. The result is "01 91". This is the value to be used in the query.*

## LIST OF TRANSMISSION STRINGS

Symbols used in the strings

A = 1 byte for slave address (Example: Slave N° 17: A = 0 x 11)

FUNCTION 1: READ COIL STATUS

QUERY

| Address | Function | 1st output address | Nr of output | 2 byte | Tot.byte |
|---|---|---|---|---|---|
| A | 0x01 | 0x0000 | 0x0008 | CRC | 8 |

RESPONSE

| Address | Function | Nr of bytes | Output status | 2 byte | Tot.byte |
|---|---|---|---|---|---|
| A | 0x01 | 0x01 | 0x00 | CRC | 6 |

Output status: 1 bit per output. 1st Output address = LSB of Output status. (1 = On, 0 = Off).

Status of outputs: In this byte each output is identified by 1 bit

The address of the 1st. output is the least significant bit (LSB) in this byte. (1 = On, 0 = Off).

FUNCTION 2: READ INPUT STATUS

QUERY

| Address | Function | 1st Input address | Nr of Input | 2 byte | Tot.byte |
|---|---|---|---|---|---|
| A | 0x02 | 0x0000 | 0x0008 | CRC | 8 |

RESPONSE

| Address | Function | Nr of bytes | Input status | 2 byte | Tot.byte |
|---|---|---|---|---|---|
| A | 0x02 | 0x01 | 0x00 | CRC | 5+1*N°byte |

*Input Status: 1 bit for Input. 1st Input address = LSB of Input status. (1 = On, 0 = Off).*

FUNCTION 3: READ HOLDING REGISTERS

QUERY

| Address | Function | 1st register address | Nr. of registers | 2 byte | Tot.byte |
|---|---|---|---|---|---|
| A | 0x03 | 0x0000 | 0x0002 | CRC | 8 |

RESPONSE

| Address | Function | Nr. of bytes | 1st register | 2 nd register | 2 byte | Tot.byte |
|---|---|---|---|---|---|---|
| A | 0x03 | 0x04 | 0x0064 | 0x00C8 | CRC | 3+2*N°registri+2 |

FUNCTION 4: READ INPUT REGISTERS

QUERY

| Address | Function | 1st Input address | Nr. of registers | 2 byte | Tot.byte |
|---|---|---|---|---|---|
| A | 0x04 | 0x0000 | 0x0001 | CRC | 8 |

RESPONSE

| Address | Function | Nr. of bytes | 1st register | 2 byte | Tot.byte |
|---|---|---|---|---|---|
| A | 0x04 | 0x02 | 0x0064 | CRC | 3+2*N°registri +2 |

FUNCTION 5: FORCE SINGLE COIL

QUERY

| Address | Function | Output address | Output status | 2 byte | Tot.byte |
|---|---|---|---|---|---|
| A | 0x05 | 0x0000 | 0xFF00 | CRC | 8 |

RESPONSE

| Address | Function | Output address | Output status | 2 byte | Tot.byte |
|---|---|---|---|---|---|
| A | 0x05 | 0x0000 | 0xFF00 | CRC | 8 |

*Output status: (FF00 = On, 0000 = Off).*

The response contains an echo of the query after the command has been executed

FUNCTION 6: PRESET SINGLE REGISTER

QUERY

| Address | Function | Register address | Register value | 2 byte | Tot.byte |
|---|---|---|---|---|---|
| A | 0x06 | 0x0000 | 0x1234 | CRC | 8 |

RESPONSE

| Address | Function | Register address | Register value | 2 byte | Tot.byte |
|---|---|---|---|---|---|
| A | 0x06 | 0x0000 | 0x1234 | CRC | 8 |

*The response contains an echo of the query after the command has been executed.*

FUNCTION 15: FORCE MULTIPLE COILS

QUERY

| Address | Function | 1st Output address | Nr. of output | Nr. of bytes | Output status | 2 byte | Tot.byte |
|---|---|---|---|---|---|---|---|
| A | 0x0F | 0x0000 | 0x0002 | 0x01 | 0x00 | CRC | 10 |

RESPONSE

| Address | Function | 1st Output address | Nr. of output | 2 byte | Tot.byte |
|---|---|---|---|---|---|
| A | 0x0F | 0x0000 | 0x0002 | CRC | 8 |

*Nr. of output: Number of outputs to be written starting from the address.*

*Nr. of bytes: Number of bytes transmitted as output status (8 output for byte)*

*Output status: nr 1 output for bit (1 = On, 0 = Off); First output corresponds to the LSB of the 1st byte. The non-significant bits are 0.*

*The response contains the identification of the outputs changed after the command has been executed.*

FUNCTION 16: PRESET MULTIPLE REGISTERS

QUERY

| Address | Function | 1st reg. add. | Nr. of reg. | Nr. bytes | Val.reg.1 | Val.reg.2 | 2 byte | Tot.byte |
|---|---|---|---|---|---|---|---|---|
| A | 0x10 | 0x0000 | 0x0002 | 0x04 | 0x0000 | 0x0000 | CRC | 7+2*N°registri +2 |

RESPONSE

| Address | Function | 1st register address | Nr of reg. | 2 byte | Tot.byte |
|---|---|---|---|---|---|
| A | 0x10 | 0x0000 | 0x0002 | CRC | 8 |

*Nr. of registers: Number of registers to be written starting from the address.*

*Nr. of bytes: Number of bytes transmitted as value of the registers (2 bytes per register)*

*Registers value.: Contents of registers from the first.*

*The response contains the identification of the registers changed after the command has been executed.*

## LIST OF THE MODBUS PROTOCOL HOLDING REGISTERS

| Address | Description | Range Value | Stored in E2prom |
|---|---|---|---|
| 40001 | Set point 1 temporary | 0 to full scale | NO |
| 40002 | Set point 2 temporary | 0 to full scale | NO |
| 40003 | Command register | 1-4,16-19,32 See relative table | |
| 40004 | Set point 1 permanent | 0 to full scale | YES |
| 40005 | Set point 2 permanent | 0 to full scale | YES |
| 40006 | Gross weight value (H) | | |
| 40007 | Gross weight value (L) | 0 to full scale | |
| 40008 | Input status byte | See relative table (page 40) | |
| 40009 | Net weight value (H) | | |
| 40010 | Net weight value (L) | 0 to full scale | |
| 40020 | Peak gross weight | 0 to full scale | NO |
| 40080 | Command register | 1-5,16-19,32 See relative table | |
| 40081 | Command data register 11 (Hex) See relative table | | |
| 40082 | Status register 00, 03-05 (Hex) See relative table | | |
| 40083 | Status data register 06 (Hex) See relative table | | |
| 40100 | Load cell/s total capacity (kg) H | | |
| 40101 | Load cell/s total capacity (kg) L | 0-500000 (1) | YES |
| 40102 | Sensitivity of load cell/s | 1.0000 - 4.0000 (1) | YES |
| 40103 | Net weight of the weighing system (H) | | |
| 40104 | Net weight of the weighing system (L) | NET 0 to full scale (1) | YES |
| 40105 | Dead load of the weighing system (H) | | |
| 40106 | Dead load of the weighing system (L) | DEAD L 0 to full scale (1) | YES |
| 40110 | Operating mode | 0-2 (3) | YES |
| 40150 | Display divisions | 0 - 14 (2) See relative table | YES |
| 40180 | Digital filter value | 0-9 (3) | YES |
| 40181 | Motion band value | 0-4 (3) | YES |
| 40182 | Auto zero value | 0 0.1-10.00 (3) | YES |
| 40183 | Zero tracking value | 0-4 (3) | YES |
| 40200 | Operating mode Set point 1 | | YES |
| 40201 | Hysteresis Set point 1 | 0 to full scale | YES |
| 40202 | Timer Set point 1 | 0.1-100.0 | YES |
| 40203 | Delay Set point 1 | 0.1-100.0 | YES |
| 40204 | Operating mode Set point 2 | | YES |
| 40205 | Hysteresis Set point 2 | 0 to full scale | YES |
| 40206 | Timer Set point 2 | 0.1-100.0 | YES |
| 40207 | Delay Set point 2 | 0.1-100.0 | YES |
| 40300 | Baud rate | 0-4 (3) | YES |
| 40301 | Serial address | 1-99 | YES |
| 40302 | Response delay | 0-100 | YES |
| 40303 | Keys management | 0-255 (5) | NO |
| 40400 | Analog output full scale | 0 to full scale | YES |
| 40401 | Analog output operating mode | 0-3 (3) | YES |
| 40402 | Analog output range | 0-3 (3) | YES |
| 40403 | Zero offset | | (4) |
| 40404 | Full scale offset | | (4) |
| 40405 | An-Zero (negative weight value for zero analog output) | | YES |

*(1) The combined theoretical net and tare weight values must not exceed the total capacity value.*

*(2) Refer to the 15 values from 0.001 to 50*

*(3) For the list of values please refer to the user manual.*

*(4) They are stored in the E2prom if writing the function 0000 in the status register.*

*(5) Word for the management of the keys.*

## CODING DIVISION VALUE TABLE

| Code | Division value |
|---|---|
| 0 | 0.001 |
| 1 | 0.002 |
| 2 | 0.005 |
| 3 | 0.01 |
| 4 | 0.02 |
| 5 | 0.05 |
| 6 | 0.1 |
| 7 | 0.2 |
| 8 | 0.5 |
| 9 | 1 |
| 10 | 2 |
| 11 | 5 |
| 12 | 10 |
| 13 | 20 |
| 14 | 50 |

## WORD 40303: KEYS MANAGING

Writing value 0xFF in the word 40303 will determine the function of the keys in the "remote input", as per the table below:

| WORD 40303 | | | | | | | | | | | | | | | |
|---|---|---|---|---|---|---|---|---|---|---|---|---|---|---|---|
| 1° Byte | | | | | | | | 2° Byte | | | | | | | |
| 7 | 6 | 5 | 4 | 3 | 2 | 1 | 0 | 7 | 6 | 5 | 4 | 3 | 2 | 1 | 0 |

SET KEY

Bit status:

FUN KEY

0 = non pressed key

->0<- KEY

1 = pressed key

PRG KEY

*Writing value 0xAA in the word 40303 will determine the standard function of the keys (set-up).*

## SERIAL PARAMETER SPECIFICATIONS:

- Once the "serial address" and "response delay" have been modified, they take effect immediately.
- The serial port mode can't be modified via Modbus.
- When setting a new baud rate value, the power to the instrument must be removed and re-applied in order for the changes to take effect

## INPUT STATUS BYTES TABLE

*The Modbus address 40008 is composed by 2 bytes. The conversion of these 2 bytes from hex into binary gives the meaning of each single bit described in this table.*

| Description | Bit's meaning | |
|---|---|---|
| | 0 | 1 |
| Net weight polarity | + | - |
| Gross weight polarity | + | - |
| Stable weight | NO | YES |
| Millivolt polarity | + | - |
| Underload condition | NO | YES |
| Overload condition | NO | YES |
| Off range condition | NO | YES |
| Preset tare condition | NO | YES |
| Input 1 status | OFF | ON |
| Input 2 status | OFF | ON |
| Relay output 1 status | OFF | ON |
| Relay output 2 status | OFF | ON |
| Scale unloaded "ZB" (*) | NO | YES |
| Keyboard status (**) | NO | YES |
| Scale unloaded "ZC" (***) | NO | YES |

*E.g. if the bytes in the address 40008 are 64 85, the conversion into binary gives the sequence of bits 110010010000101.*

*The digit at the right hand side matches with the 1st bit (Net weight polarity), therefore the values given in the above mentioned example are equivalent to:*

- *Net weight polarity= 1 = negative*
- *Gross weight polarity= 0 = positive*
- *Weight stability= 1 = yes*
- *Millivolt polarity= 0 = positive*
- *Underload condition= 0 = no*
- *Overload condition= 0 = no*
- *Off range condition= 0 = no*
- *Preset tare condition= 1 = yes*
- *Input 1 and 2= 0= de-activated*
- *Relay output 1 status= 1 = activated*
- *Relay output 2 status= 0 = de-activated*
- *Scale unloaded (ZB)= 0 = no*
- *Keyboard status= 1 = locked*
- *Scale unloaded (ZC)=*

*(*) Bit of empty scale "ZB" related to a new Zero Scale obtained with the*  *key (see page 14). The balance is considered empty when the weight is in the range "0 Band" (see page 29).*

*(**) The keyboard is considered locked when they are all the keys on the front panel (see page 17).*

*(***) Bit of empty scale "ZC" related to the Zero Calibration (see page 26). This bit does not follow the Zero Scale obtained with the 0 key but remains related to the original Zero Calibration. The balance is considered empty when the weight is in the range "0 Band" (see page 29)*

### LIST OF INPUT REGISTERS (3X)

| Address | Description |
|---|---|
| 30001 | Net weight value (divisions) |
| 30002 | Gross weight value (divisions) |
| 30003 | A/D converter internal counts (H) |
| 30004 | A/D converter internal counts (L) |
| 30005 | Millivolt value |
| 30006 | Instrument software release |
| 30007 | Instrument "On-line" (1= when display shown weight; 0= in all other case) |

### LISTS OF THE COILS (0X)

| Address | Description | Bit's meaning | | Range Value | Stored in E2prom |
|---|---|---|---|---|---|
| | | 0 | 1 | | |
| 00001 | Logic output 1 | De-activated | Activated | 1 bit | NO |
| 00002 | Logic output 2 | De-activated | Activated | 1 bit | NO |

### LIST OF THE FUNCTIONS COMMAND REGISTER (40003)

| Function code | Description | Command Data Register | Stored in E2prom |
|---|---|---|---|
| 0001 (01) | Semi-automatic zero | - | NO |
| 0002 (02) | Autotare | - | NO |
| 0003 (03) | Peak reset | - | NO |
| 0004 (04) | Force net weight visualization | - | NO |
| 0005 (05) | Force gross weight visualization | - | NO |
| 0016 (10) | Zero calibration | - | YES |
| 0017 (11) | Full scale calibration | 40081 (sample weight value in division) | YES |
| 0018 (12) | Reset zero calibration | - | YES |
| 0019 (13) | Reset full scale calibration | - | YES |
| 0032 (20) | Back-up eeprom | - | YES |

*Except for the Full-Scale Calibration, the execution of the commands described in the table above is done simply writing in the address 40003 the function code for the command you want to execute.*

*For Full-Scale Calibration firt of all write the value of the sample weight (in number of divisions) into the 40081 register and then write the function code 11 in the register 40003.*

*Remember to "reset" function codes (by writing "0" in the 40003) to avoid that the instrument executes the commands continuosly*

### LIST OF THE FUNCTION "STATUS REGISTER" (40082)

| Function Codes | Description | Holding Register | Status Data Register | Stored in E2prom |
|---|---|---|---|---|
| *0000 (00)* | *None of the functions are activated* | | - | *NO* |
| *0003 (03)* | *Analog output zero offset adjustment* | *40403* | - | *SI* |
| *0004 (04)* | *Analog output full scale offset adjustment* | *40404* | - | *SI* |
| *0005 (05)* | *Test relay output* | | - | *NO* |
| *0006 (06)* | *Test analog output* | | *40083 (analog output value )* | *NO* |

*To Adjust the Zero analog output offset write the value (from 0 to 64000) in to register 40403 then write the function code 3 into the address 40082.*

*To adjust the offset of the FS analog output, write the value (from 0 to 64000) in to register 40404 then write a function code 4 into the address 40082.*

*To test the relay outputs write the function code 5 in the address 40082, then perform the Modbus function 15 (Force Multiple coil - see page 39)*

*To test the analog output must first write the value (0 to 64000) into 40083 (Status Data Register) and then write the function code 6 40082 in the address.*

*Remember to "reset" function codes (by writing "0" in the 40082) so that the instrument executes commands continuously.*

### COMMUNICATION ERRORS HANDLING

The communication strings are controlled by the CRC (Cyclical Redundancy Check). If a communication error occurs, the slave unit doesn't answer. The master unit controls a timeout when waiting for the response from the slave. If the slave doesn't answer during this timeout, it means that a communication error has occurred.

### RECEIVED DATA ERROR HANDLING

If the string is received correctly but is not executable, the slave answers the master with an EXCEPTION RESPONSE as per table below.

| Code | Description |
|---|---|
| 1 | ILLEGAL FUNCTION (The function is not valid or not supported) |
| 2 | ILLEGAL DATA ADDRESS (The specified data address is not available) |
| 3 | ILLEGAL DATA VALUE (The data value received is not valid) |

## PRINT PROTOCOL

This protocol enables the communication with a printer. The data on the printed report are the following: NET, GROSS and TARE (+ PEAK, if enabled).

The print command takes place by pressing the PRG key or by activating the remote input #2. (*)

The printed report is issued only if the following conditions are met:

- Gross weight positive
- Net weight positive
- Stable weight (**)
- BLIND function disabled (***)

(*) In case the PRG key is locked (see page 17) the print command can take place through the remote input #2 only.

(**) The weight stability condition is controlled only if the "MOTION" parameter (see page 28) is set to a value different than 0.

If MOTION = 0 the printed report is issued even if the weight is unstable.

(***) In case the BLIND function is enabled (see page 17) the print command can take place through the remote input #2 only, not via the PRG key.

Between one printout and the next one the weight must change for at least 20 counts.

## CONNECTION TO THE PRINTER

## PRINTED REPORT FORMATS

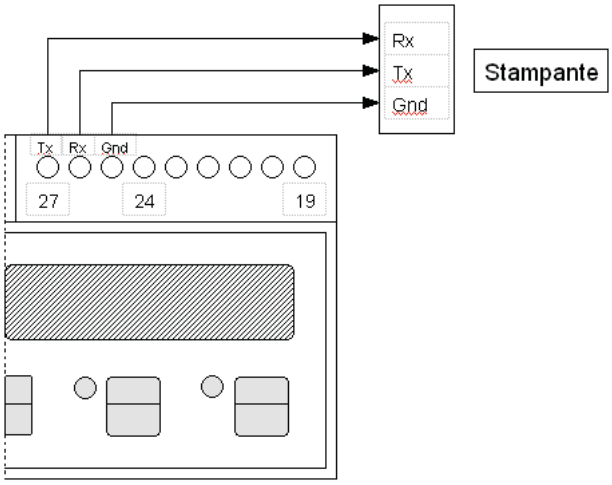


| Standard | | Peack enabled | |
|---|---|---|---|
| Net | 9.488 kg | Net | 9.488 kg |
| Gross | 19.874 kg | Gross | 19.874 kg |
| Tare | 10.386 kg | Tare | 10.386 kg |
| | | Peak | 35.294 kg |

# UPLOAD AND DOWNLOAD FUNCTIONS

With the download function, the instrument sends the configuration in the e2prom memory via the serial item. This configuration can be saved to a .txt file.

With the upload function instead, it is received by the serial item the txt file containing the configuration and the instrument is set with the parameters received.

With regard to the use of the InovationTM software, the Upload and Download functions represent an alternative for configuring the instrument, and offers remarkable differences:

- The InovationTM software must be installed on a PC, while the Upload/Download procedures do not require any software installation.
- The InovationTM software allows to configure the instrument (or to transfer an existing configuration) from a PC, and parameters can be edited at any time prior to starting the transfer process
- The Upload and Download functions allow to transfer the complete set-up configuration from one instrument to another, passing through a PC, without enabling parameters modification. *In this case, the instrument can send to a PC (download) or receive from a PC a text file (*.txt) containing the configuration. Upload and/or Download can be managed through the use of any PC application able to transfer text files: MS WindowsTM Hyper Terminal is an example.*

Practically:

With the InovationTM software the PC is used to create a set-up configuration to be transferred to an instrument.

With the Upload/Download procedures the PC is only used as a "bridge" (a tool) to transfer the set-up configuration from an instrument to another one.

The advantages related to Upload and Download functions can be summed up as follows:

1. Quick parameter transfer from one instrument to another.
2. Saving of Zero and FS Calibration previously performed as Dead weight calibration. (*)
3. Use of Hyper Terminal (available on any PC with MS WindowsTM operating system) or similar application, with no need of any dedicated software installation (required by the InovationTM software).

*(*) While InovationTM software saves the theoretical calibration (Data-sheet) only, the Upload and Download functions also save the actual Zero and FS Calibration previously performed as Dead weight calibration.*

*In other words, a new instrument that must replace a faulty one will retain an identical behaviour if it has received the configuration of the previously installed unit .*

*This function is very handy on those weighing equipments where both a new Zero and a new FS calibration would be difficult or need the use of large volume sample masses, or worst, in case of a tank filled with a product that cannot be emptied for some time, so that the Zero calibration cannot be done.*

### HOW TO PREPARE THE INSTRUMENT FOR CONFIGURATION TRANSFER:

Common settings for dual procedures (Upload - Download):

1. *Establish a serial connection DAT - PC communication port to be used: RS232 or RS485 or USB.*
2. *Access SERIAL menu (see page 33)*
   - *Set "PROT-1" as "SLAVE" mode*
   - *Back to main menu, select CONFIG. Menu*

## DOWNLOAD (TRANSFER OF CONFIGURATION FROM INSTRUMENT TO PC)

1. From the CONFIG menu, select "DNLOAD" and leave the instrument in this condition (the instrument is now ready to transfer its own configuration to the PC).

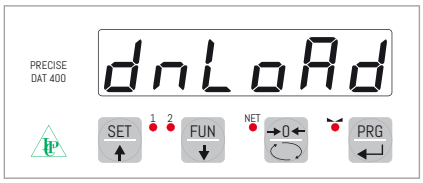


2. Open the Hyper Terminal application on your PC (Start - All Programs - Accessories - Communications) Assign any name to the "Connection description" and Click on OK.

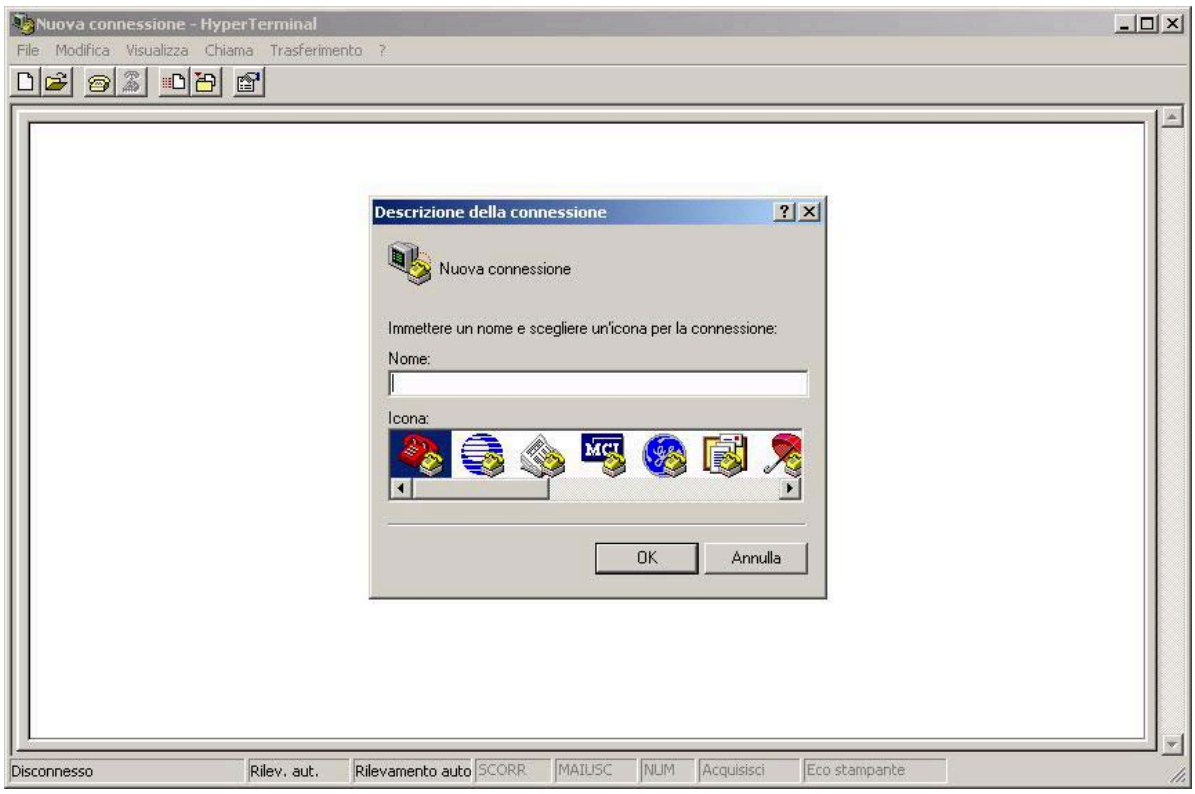


3. At "Connect using", select the serial port to be used for communicating with the DAT (the example here below selects the PC's COM1 serial port), then Click on OK.


4. Set the serial port communication parameters.
   Baud rate (Bits per second) and Data format (Data Bits, Parity, Stop Bits) must correspond to those programmed in the DAT (check SERIAL menu on page 33)
   Select "Flow Control" = None).
   Click on "Apply", then "OK".

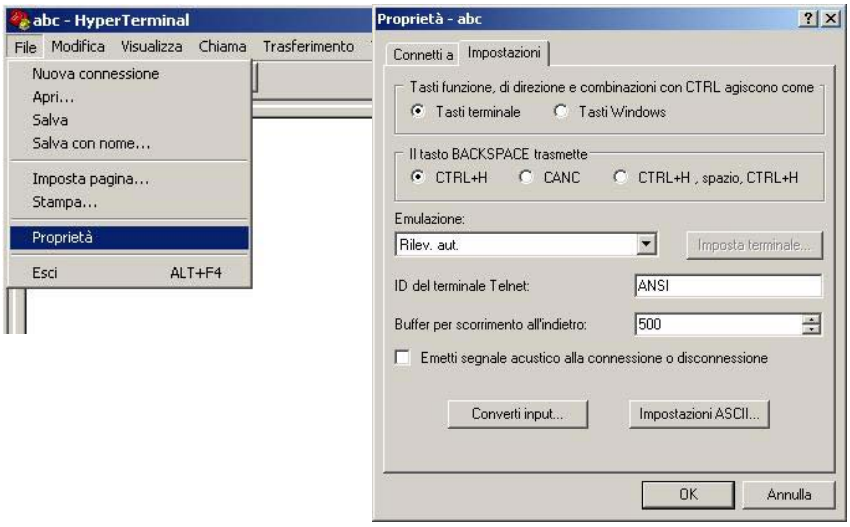


5. Click on "File", "Properties" Select "Settings" click on "ASCII Setup"


6. On the upper part of the screen ("ASCII Sending"):
Enable "Send line ends with line feeds"
Set "Line Delay" at 200 milliseconds
On the lower part of the screen ("ASCII Receiving"):
Enable "Wrap lines that exceed terminal width"
Then click on OK two times


7. Click on "Transfer", then on "Capture Text...". Click on "Browse" to select destination directory and assign a name to the file incoming. Click on "Start"

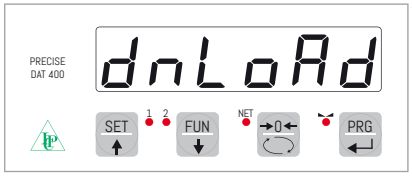


8. Press PRG key on the DAT to start data transfer to the PC. When transfer is complete (lasting a few seconds), the instrument displays "DONE".

9. DAT configuration data received on PC will have this format:

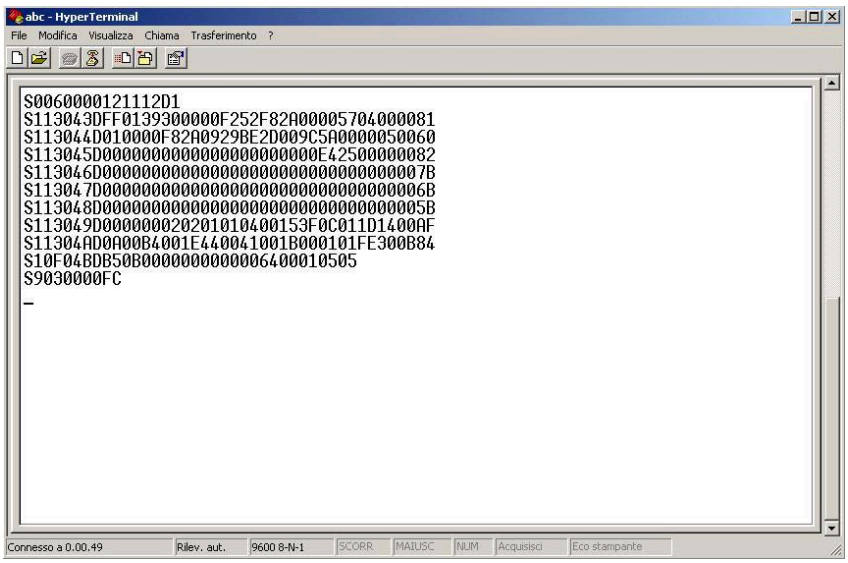


10. Close the connection with a click on button (Disconnect) then close the Hyper Terminal application using the X button on the upper right corner of the screen
11. Click on "Yes" when Hyper Terminal prompts the following:


12. In the destination directory previously decided at Section 7, a text file was created (and a name assigned) containing the instrument's configuration. The file can be open with the Notepad application although the related data cannot be interpreted and most of all must not be modified.

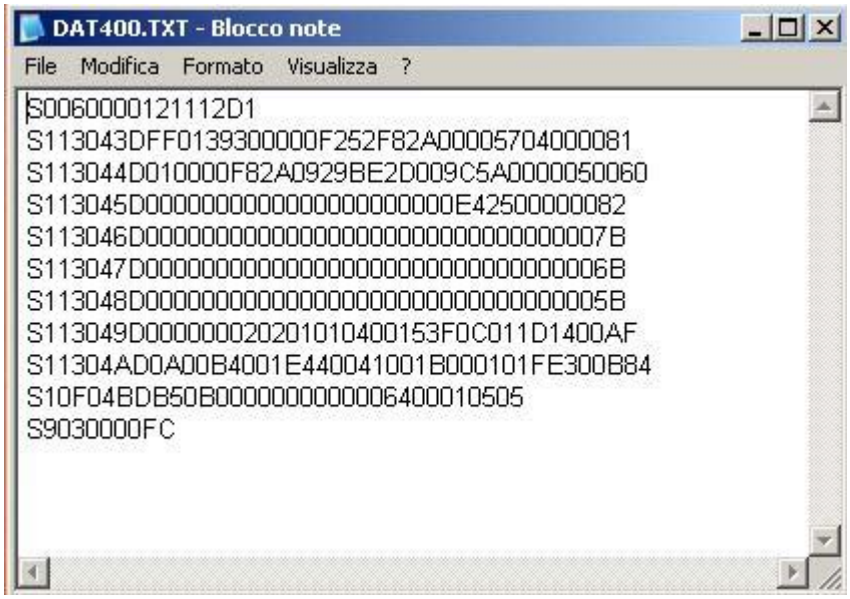

## UPLOAD (TRANSFER OF CONFIGURATION FROM PC TO INSTRUMENT)

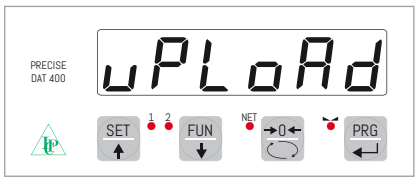


1. From the CONFIG menu, select "UPLOAD" and leave the instrument in this condition (the instrument is now ready to receive from the PC the text file containing the configuration ).
2. Open the Hyper Terminal session on your PC, saved as in Section 11 (Start - All Programs - Accessories - Communications). The session name is ABC in the following example.


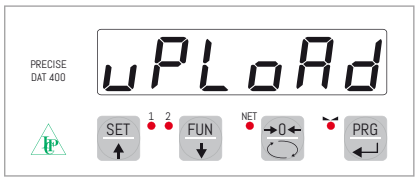


3. Click on "Transfer", then on "Send text file…"
4. Get the instrument ready to receive the text file from the PC by pressing the PRG key (message on the display: "Receiv")
5. Browse the directory previously decided and locate the text file to be transferred to the instrument, a double-click on it will start the data tranfer process. Upon receipt of file, the instrument automatically returns to CONFIG menu.


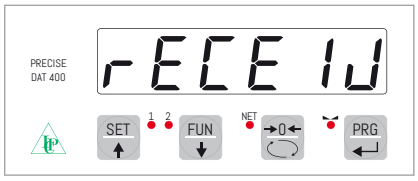



6. Close the Hyper Terminal application using X button on the upper right corner of the screen then, click on "Yes" when the following message is prompted:

7. Press the →0← key on the instrument (message "STORE?"), then click on the PRG key. The instrument will now operate according to the new configuration just received.

# THE USB CONNECTION BETWEEN THE DAT-400 AND THE PC

The hardware module installed inside the DAT-400 and allowing the instrument to be interfaced with a PC through the USB port, is named CP210x, manufactured by Silicon Laboratories.

The CP210x module needs the drivers to be installed in the PC

## VIRTUAL COM PORT DRIVER INSTALLATION FOR WINDOWS 2000 / XP / SERVER 2003 / VISTA

Download the drivers from the Manufacturer's web site using the following link:

http://www.silabs.com/tgwWebApp/public/web_content/products/Microcontrollers/USB/en/mcu_vcp.htm

- Mouse click on "VCP Driver Kit", to start the download of the file named: "CP210x_VCP_Win2K_XP_S2K3.exe" will start.
- Double mouse click on the icon of the file just downloaded to start the set-up wizard.
- Follow the set-up wizard until the installation is complete.

*In some cases the system needs to be re-started in order to complete the installation process.*

## RUNNING SERIAL APPLICATIONS USING THE USB CONNECTION

Either the std. RS-232 COM port or the USB port can be used to handle the DAT-400 serial protocols, anyway the USB port is almost never used in industrial environments, therefore we recommend using the USB port only for configuring the instrument via the Inovation software.

Switch-on the DAT-400 and connect it to the PC using a std. USB cable, the message "Found new hardware" appears on the PC screen, then a message advising that the new hardware is ready to be used will appear.

Please consider the following:

1. The PC operating system automatically assigns a COM port # to the USB adapter.
2. The Inovation software supports COM port #'s up to 6.

*If the COM port # automatically assigned by the system to the USB adapter is < 6 the Inovation software can be used immediately, otherwise it will be necessary to change the COM port manually.*

Perform the following steps to see (or to change) the COM port # assigned to the USB adapter:

## VIEWING OR CHANGING THE COM PORT # ASSIGNED TO THE USB ADAPTER

1. Right mouse click on "My Computer", left mouse click on "Properties", "Hardware", "Device Manager", "Ports (COM & LPT)".
2. The "Ports (COM & LPT)" list includes "CP210x USB to UART Bridge Controller (COM X)". ("X" is the COM port #). In order to avoid system conflicts make sure that no other devices are using the same COM port #.
3. Bypass steps 4 to 7 only in case the COM port # has not to be changed.
4. Double mouse click on "CP210x USB to UART Bridge Controller (COM X)".
5. Select "Port settings" then "Advanced".
6. Open the "COM port number" popup menu and assign a COM port number 1 to 6.
7. Click on OK and come back to the "Ports (COM & LPT)" list.
8. Select "CP210x USB to UART Bridge Controller (COM X)"
9. Right mouse click on it.
10. Select "Scan for hardware changes"
11. Left mouse click on it.
12. Close the "Device Manager" application.

# PROFIBUS/DEVICENET/CANOPEN PROTOCOL

The data exchange with Fieldbus is done on two separate areas of memory, described below. The "Input Data Area" and the "Output Data Area".

### READING AND WRITING THE "PAGESE " IN THE FIELDBUS PROTOCOL

As explained in this section, it is only valid for the following bytes:

- From 14 to 31 in the "Input Data Area".
- From 10 to 27 in the "Output Data Area".
- And for the function codes from 0006 to 0011 and 00FF in the "Command Register":

In order to manage the reading and writing, the parameters described in the following tables (24 parameters, for a total of 48 bytes) and, not having enough memory of the Anybus IC module to hold them all at the same time, it's used the "PAGES" management, that is, groups of records, which will use the same part of the memory of the Fieldbus module at different times.

Considering that :

- The total capacity of the Fieldbus module is 32 bytes for the "Input Data Area" and 48 bytes for the "Output Data Area".
- The memory used normally in the Fieldbus module is 14 bytes for the "Input Data Area" (byte 0 to 13) and 10 bytes for the "Output Data Area" (bytes 0 to 9).

It follows that, while leaving these locations unchanged, they remain available 18 bytes, respectively, in the "Input Data Area" and 38 bytes in the "Output Data Area".

Then dividing the parameters described in the following tables in 3 "PAGES" with maximum length of 18 bytes each, you will be able to read and write these pages using the parts of free memory in the two areas.

Thanks to the continuous control of the content of the "Command Register", the DAT notices immediately when there is a function code corresponding to one of 3 Pages (read or write).

The Fieldbus Master to WRITE the parameters related to the various pages must perform the following steps:

- Write the page number that you want to write (1 = Page 1, 2 = Page 2 = 3 = Page 3) in the byte11.
- Write sequentially, from byte 12 to byte 27 of the "Output Data Area", the parameters related to page selected (described in the following tables)
- Write (byte 5 of the "Output Data Area") the function code related to the writing of the Page (6 = Page 1, 7 = Page 2, 8 = Page 3) in "Command Register".

Based on these events, the DAT performs the writing of the various parameters related to page selected.

The Fieldbus Master to READ the parameters related to the various pages must perform the following steps:

- Write the page number that you want to write (1 = Page 1, 2 = Page 2 = 3 = Page 3) in the byte11.
- Write the function code on the page of the writing (9 = Page 1, 10= Page 2, 11 = Page 3), in the "Command Register" (byte 5 of the "Output Data Area").

Based on these events, the DAT performs the following operation.

- Execution of commands received from the Master
- Restitution, in byte 15 of the "Input Data Area ", of a number related to the page just read (*) and, in bytes 16 to 31 of the same area, the data contained in the page.

(*) The number given is: 4 if the read page is 1, 5 if the read page is 2, 6 if the read page is 3

If the master intends to read or write the same page again, it shall, before sending the function code related to the page number, run the “Reset Page Number” command by using the function code 00FF.

The “reset” is not necessary if the page to read or write is different from the previous one.

**INPUT DATA AREA**

| Variables | Mapping the bytes |
|---|---|
| Permanent setpoint 1 | 0 - 1 |
| Permanent setpoint 2 | 2 - 3 |
| Gross weight (MSB) | 4 - 5 |
| Gross weight (LSB) | 6 - 7 |
| Net weight (MSB) | 8 - 9 |
| Net weight (LSB) | 10 - 11 |
| Input status byte | 12 - 13 |
| Page number | 14 - 15 |
| Register 1 on page x | 16 - 17 |
| Register 2 on page x | 18 - 19 |
| Register 3 on page x | 20 - 21 |
| Register 4 on page x | 22 - 23 |
| Register 5 on page x | 24 - 25 |
| Register 6 on page x | 26 - 27 |
| Register 7 on page x | 28 - 29 |
| Register 8 on page x | 30 - 31 |

**OUTPUT DATA AREA**

| Variables | Mapping the bytes |
|---|---|
| Temporary setpoint 1 * | 0 - 1 |
| Temporary setpoint 2 * | 2 - 3 |
| Command register ** | 4 - 5 |
| Permanent setpoint 1 * | 6 - 7 |
| Permanent setpoint 2 * | 8 - 9 |
| Page number | 10 - 11 |
| Register 1 on page x | 12 - 13 |
| Register 2 on page x | 14 - 15 |
| Register 3 on page x | 16 - 17 |
| Register 4 on page x | 18 - 19 |
| Register 5 on page x | 20 - 21 |
| Register 6 on page x | 22 - 23 |
| Register 7 on page x | 24 - 25 |
| Register 8 on page x | 26 - 27 |

**LIST OF THE INPUT STATUS BITS (BYTES 12 - 13)**

| Bit | Description | Bit meaning | | Example |
|---|---|---|---|---|
| | | 0 | 1 | 85h + 64h |
| 0 | Net weight sign | + | - | 1 |
| 1 | Gross weight sign | + | - | 0 |
| 2 | Stable weight | NO | YES | 1 |
| 3 | Millivolts sign | + | - | 0 |
| 4 | Underload condition | NO | YES | 0 |
| 5 | Overload condition | NO | YES | 0 |
| 6 | Off range condition | NO | YES | 0 |
| 7 | Condition of the tare entered | NO | YES | 1 |
| 8 | Input 1 | Disabled | Enabled | 0 |
| 9 | Input 2 | Disabled | Enabled | 0 |
| 10 | Output 1 | Disabled | Enabled | 1 |
| 11 | Output 2 | Disabled | Enabled | 0 |
| 12 | Empty scale (1) | NO | YES | 0 |
| 13 | Locked keyboard (2) | NO | YES | 1 |
| 14 | Empty scale (3) | NO | YES | 1 |

*(1) Gross weight <= "0-BAND" parameter*

*(2) The keyboard is deemed locked when all the keys of the front panel are locked*

*(3) weight compared to the calibration zero <= "0-BAND" parameter*

This bit does not follow the Zero Scale obtained with the key 0, but remains linked to the original Zero Calibration. The scale is considered empty when the weight is in the range "0 Band" (see page 29).

If, for example, the value in byte 12 is 85h and byte 13 is 64h, the conversion result from hexadecimal to binary is 10000101 for byte 12 and 01100100 for byte 13. In this sequence, the right digit corresponds to the first bit of the relative byte.

* Writing (setting) of the values of setpoint from the Fieldbus is possible only when the instrument's keyboard is locked (see "How to lock/unlock the keyboard." page 17), otherwise, the setting of the values can only be from the keyboard, not from the Fieldbus.

The setting of the values of the setpoints 1 and 2 shall take place:

- from the keyboard in absolute value;
- from the Fieldbus into divisions.

The value of the setpoints 1 and 2 returned on the Fieldbus protocol is always in number of divisions.

The "number of divisions" is the result of the absolute value of the setpoints divided by the "division value" of the instrument ("DSPDIV" parameter).

Example: If the division value = 0.5 and the absolute setpoint value = 450, the setpoint value returned on the Fieldbus = 900 (450 = 900 divisions by 0.5 each).

The writing the data in bytes 00 to 03, 06 to 09 and the codes from 0001 to 0005 in the "Command Register" takes place according to the standard procedure provided for by the Fieldbus protocol.

** To write the other data, please refer to what has been explained on page 55.

## FUNCTIONS LIST OF THE COMMAND REGISTER (0X1004)

| Function code | Description | Command function of the data register | Stored in $E^2$prom |
|---|---|---|---|
| 0001 | Semi-automatic zero | - | NO |
| 0002 | Autotare | - | NO |
| 0003 | Peak reset | - | NO |
| 0004 | Switching of the net weight display | - | NO |
| 0005 | Switching of the gross weight display | - | NO |
| 0006 | Read page 1 | - | NO |
| 0007 | Read page 2 | - | NO |
| 0008 | Read page 3 | - | NO |
| 0009 | Write page 1 | - | NO |
| 0010 | Write page 2 | - | NO |
| 0011 | Write page 3 | - | NO |
| 0x00FF | Enable reading or write the page n | - | - |

## PAGES LIST

**Page no. 1**

| Fieldbus address | Variables | Range |
|---|---|---|
| Register 1 | Total capacity of the cells in kg (H) | 0-500000 |
| Register 2 | Total capacity of the cells in kg (L) | |
| Register 3 | Nominal sensitivity of the cells | 10000-40000 |
| Register 4 | System net weight (H) | 0-Capacity |
| Register 5 | System net weight (L) | |
| Register 6 | System preloading (H) | 0-Capacity |
| Register 7 | System preloading (L) | |
| Register 8 | Division value | 0 – 14 (2) |

**Page no. 2**

| Fieldbus address | Variables | Range |
|---|---|---|
| Register 1 | Operation mode | 0 – 2 |
| Register 2 | Digital filter value | 0-9 |
| Register 3 | Weight stability parameter | 0-4 |
| Register 4 | Autozero threshold | 0.1-10.00 |
| Register 5 | Tracking value of zero | 0-4 |
| Register 6 | Baud rate | 0-4 |
| Register 7 | Serial address | 1-32 |
| Register 8 | Delay of the response | 0-100 |

**Page no. 3**

| Fieldbus address | Variables | Range |
|---|---|---|
| Register 1 | Operation mode Set 1 | |
| Register 2 | Hysteresis Set 1 | 0-Net capacity |
| Register 3 | Timer Set 1 | 0.1-100.0 (5) (6) |
| Register 4 | Delay Set 1 | 0.1-100.0 (5) (6) |
| Register 5 | Operation mode Set 2 | |
| Register 6 | Hysteresis Set 2 | 0-Net capacity |
| Register 7 | Timer Set 2 | 0.1-100.0 (5) (6) |
| Register 8 | Delay Set 2 | 0.1-100.0 (5) (6) |

To set the data for a page in the instrument, write the values of the eight registers in the output data area (bytes 1 -17) and then enter the appropriate command in the command register (bytes 4-5). The commands to set the Fieldbus data from the instrument are those of Read page 1 (6) Read page 2 (7) and Read page 3 (8); vice versa for the instrument values in the output data area you must use the commands Write page 1 (9), Write page 2 (10) and Write page 3 (11).

**CAUTION: If the calibration performed via the Fieldbus is not acceptable, the theoretical values are set to for the capacity set.**

### TABLE OF THE CODES FOR THE OPERATION MODE OF THE SETPOINTS

The table below represents the content of the bytes 16-17 and 24-25 of the Input Data Area - page 3 (see table at page 56) based on the configuration of the operating mode of the 2 setpoints relative to 2 relay outputs.

It covers all the possible combinations.

For a more detailed explanation of the various items, please refer to pages 55-57 of this manual.

The data is contained in the least significant byte (byte 17 for the Operation Mode of the Setpoint 1, byte 25 for the Operation Mode of the Setpoint 2)

The reading of the data is done according to the procedures described at page 55.

| | Operation mode of the setpoints 1 and 2 | | | | Operation mode of the setpoints 1 and 2 | | |
|---|---|---|---|---|---|---|---|
| | NET | GROSS | PEAK | | NET | GROSS | PEAK |
| | N.O. | N.O. | N.O. | | N.C. | N.C. | N.C. |
| | POS | POS | POS | | POS | POS | POS |
| | NORMAL | NORMAL | NORMAL | | NORMAL | NORMAL | NORMAL |
| Corresponding Hex code | 00 | 01 | 02 | | 04 | 05 | 06 |
| | | | | | | | |
| | NET | GROSS | PEAK | | NET | GROSS | PEAK |
| | N.O. | N.O. | N.O. | | N.C. | N.C. | N.C. |
| | NEG | NEG | NEG | | NEG | NEG | NEG |
| | NORMAL | NORMAL | NORMAL | | NORMAL | NORMAL | NORMAL |
| Corresponding Hex code | 08 | 09 | 0A | | 0C | 0D | 0E |
| | | | | | | | |
| | NET | GROSS | PEAK | | NET | GROSS | PEAK |
| | N.O. | N.O. | N.O. | | N.C. | N.C. | N.C. |
| | POS | POS | POS | | POS | POS | POS |
| | STAB | STAB | STAB | | STAB | STAB | STAB |
| Corresponding Hex code | 10 | 11 | 12 | | 14 | 15 | 16 |
| | | | | | | | |
| | NET | GROSS | PEAK | | NET | GROSS | PEAK |
| | N.O. | N.O. | N.O. | | N.C. | N.C. | N.C. |
| | NEG | NEG | NEG | | NEG | NEG | NEG |
| | STAB | STAB | STAB | | STAB | STAB | STAB |
| Corresponding Hex code | 18 | 19 | 1A | | 1C | 1D | 1E |

# TROUBLESHOOTING

| PROBLEM | POSSIBLE CAUSE | SOLUTION |
|---|---|---|
| The display shows the O-L message | The weight gained is not detectable because the cell is absent or incorrectly connected | Check the connections of the cells. |
| Il The display shows the hyphen in the upper display | The weight gained cannot be shown because it exceeds the available five digits or is greater than the capacity of the cells. | |
| The display shows the underscore on the lower display. | The weight gained is not representable because negative, more than -9999. | |
| The number of decimal places is wrong. | You have not selected the correct division value. | Select the correct division value in the main menu. |
| The serial communication does not work properly. | You have not performed the installation correctly.<br>The selection of the operation of the serial interface is incorrect. | Check the connections as described in the installation manual.<br>Select the settings as appropriate. |
| The function of semiautomatic zero doesn't work. | The gross weight exceeds the action limit of semi-automatic zero.<br>The weight doesn't stabilize. | To re-establish the zero, you need to calibrate the weight.<br>Wait for the stabilization of the weight or adjust the weight filter parameter. |
| The semiautomatic tare function does not work. | The gross weight is negative or exceeds the maximum capacity.<br>The weight doesn't stabilize. | Check the gross weight.<br>Wait for the stabilization of the weight or adjust the weight filter parameter. |

# EU Declaration of conformity (DoC)

We

Pavone Sistemi S.r.l.

Via Tiberio Bianchi, 11/13/15

20863 Concorezzo, MB

**declare that the DoC issued under our sole responsibility and belongs to the following product:**

Apparatus model/Product: **DAT 400**

Type: Weighing instrument

The object of the declaration described above used as indicated in the installation manual and use, is in conformity with the relevant Union harmonisation legislation:

Directive **EMC 2014/30/EU** Electromagnetic Compatibility

The following harmonized standards and technical specification have been applied:

**EN 61000-6-2:2005**

**EN 61000-6-3:2007 + A1 2011**

Directive **LVD 2014/35/EU** Low Voltage Directive

The following harmonized standards and technical specification have been applied:

**EN 61010-1:2011**

Signed for end on behalf of:

Concorezzo: 16/01/2017

Di Reda Donato - Manager

PAVONESYSTEMS

**PAVONE SISTEMI S.R.L.**
Via Tiberio Bianchi, 11/13/15, 20863 Concorezzo (MB)
**T** 039 9162656 **F** 039 9162675 **W** en.pavonesistemi.it
Industrial Electronic Weighing Systems since 1963